FOLDER: X:\SolidWorks\CAD Drawings\ACTIVE\885\

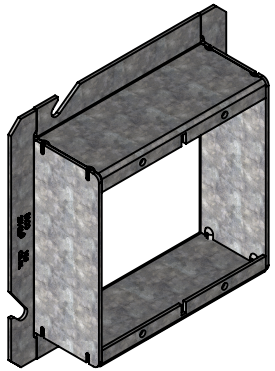

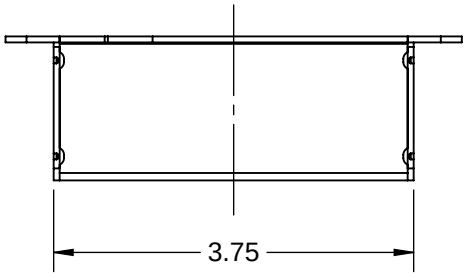

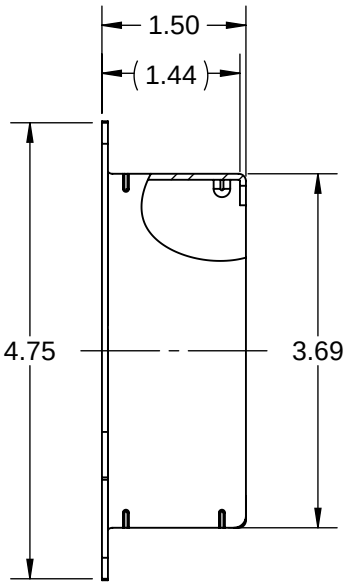

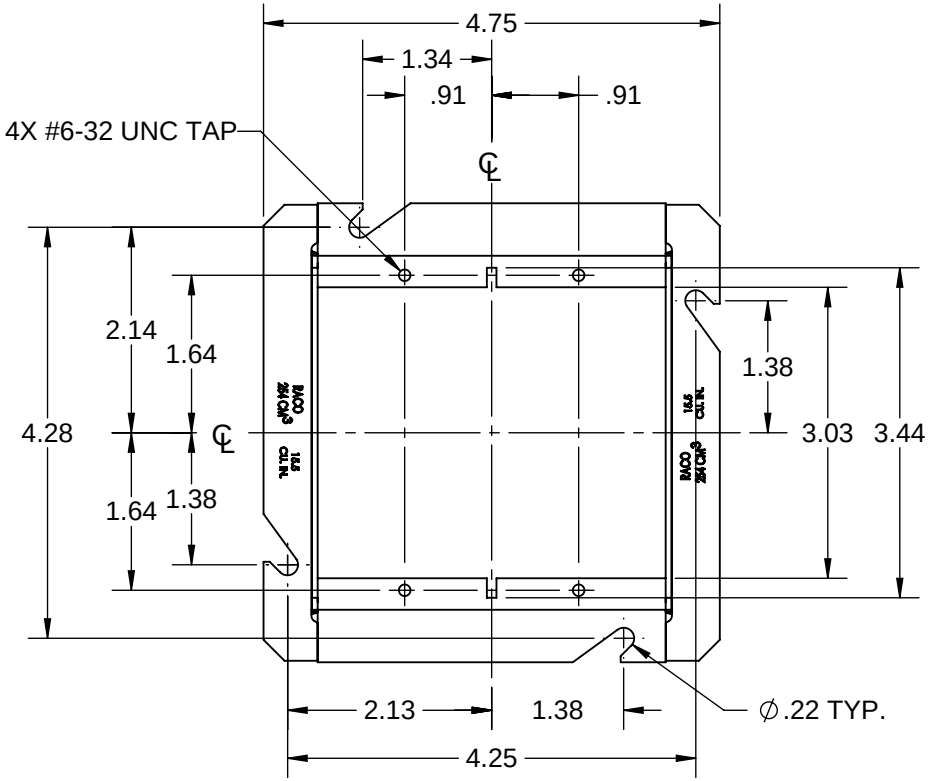

NOTES:
1. ALL DIMENSIONS ARE IN INCHES AND [MILLIMETERS]
2. BOX VOLUME: 15.5 INj [254 CMj]
3. cULus LISTED

LIST OF PARTS

DESCRIPTION	MATERIAL	FINISH
SIDES	STEEL	GALVANIZED
ENDS	STEEL	GALVANIZED

885 CUS

SYM.	REVISION DESCRIPTION	APP	DATE
	INITIAL RELEASE	RMV	08-23-17

885

DIMENSION SHEET FOR CAT. NO.

THE DESIGN AND DIMENSIONS OF THE PRODUCT SHOWN ON THIS DRAWING ARE SUBJECT TO CHANGE WITHOUT NOTICE

TITLE:

MUD RING, 4-11/16" SQ., RAISED 1-1/2", TWO DEVICE

TOLERANCE UNLESS OTHERWISE SPECIFIED

.XX DECIMAL ±.015
.XXX DECIMAL ±.005
ANGLE ±2°

RACO
South Bend, Indiana

DRAWN BY:	RMV	SCALE: 1:2
APP. BY:	N.S.	
DATE:	08-23-17	

SIZE: A

8.5in*11in