REVISIONS			
REV.	DATE	DESCRIPTION	BY:
-	01-14-19	INITIAL RELEASE	RMV

FILE NO.: 986 CUS

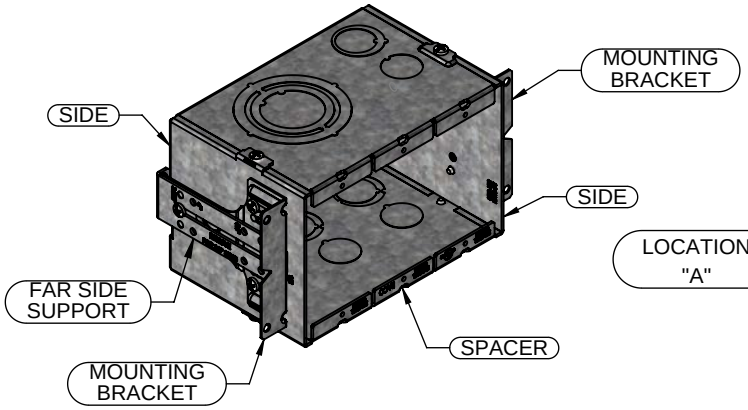

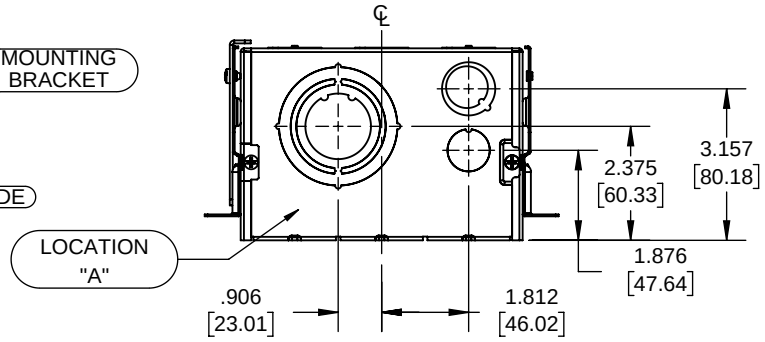

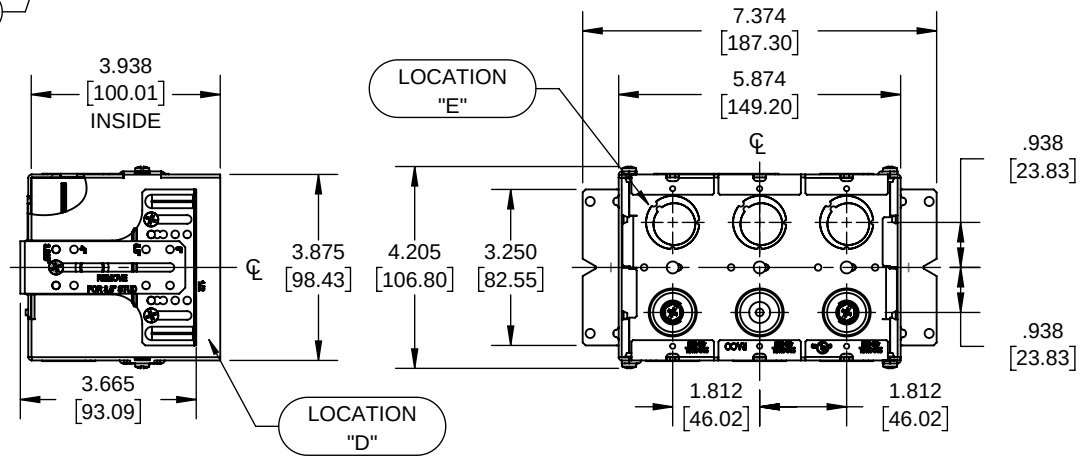

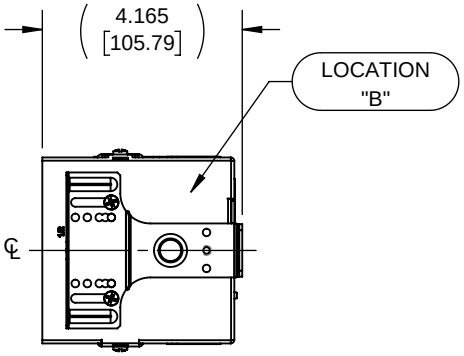

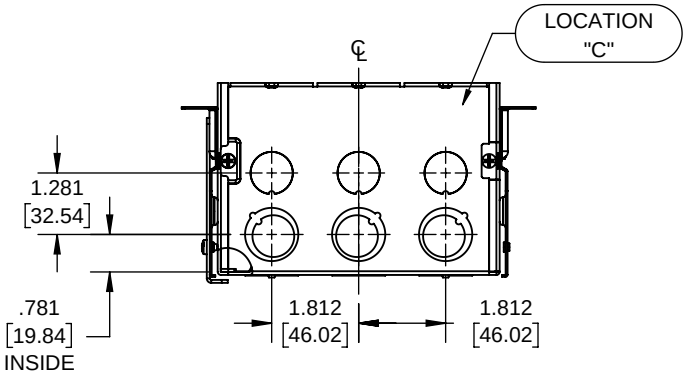

MOUNTING BRACKET	STEEL	GALVANIZED
FAR SIDE SUPPORT	STEEL	GALVANIZED
FASTENERS	STEEL	GALVANIZED
SIDE	STEEL	GALVANIZED
SPACER	STEEL	GALVANIZED
DESCRIPTION	**MATERIAL**	**FINISH**

LIST OF PARTS

THE DESIGN AND DIMENSIONS OF THE PRODUCT SHOWN ON THIS DRAWING ARE SUBJECT TO CHANGE WITHOUT NOTICE

TITLE:
GANGABLE WALL BOX, 3 GANG

DIMENSION SHEET FOR CAT. NO. 986

NOTES:
1. ALL DIMENSIONS ARE IN INCHES AND [MILLIMETERS]
2. BOX VOLUME: 79.0 INj [1294.6 CMj]
3. ACCEPTS 989 PARTITION, SOLD SEPARATELY
4. cULus LISTED

KNOCKOUTS		
TRADE SIZE	LOCATION	QTY.
(1/2"-3/4") TKO†	A	1
1/2" KO	A	1
(1/2"-3/4") TKO†	C, E	3
1/2" KO	C	3

TOLERANCE UNLESS OTHERWISE SPECIFIED

.XX DECIMAL ± .015
.XXX DECIMAL ± .005
ANGLE ± 2°

RACO

DRAWN BY:	RMV	SCALE:	SIZE:
APP. BY:	N.S.		A
DATE:	01-14-19	1:4	

8.5in*11in