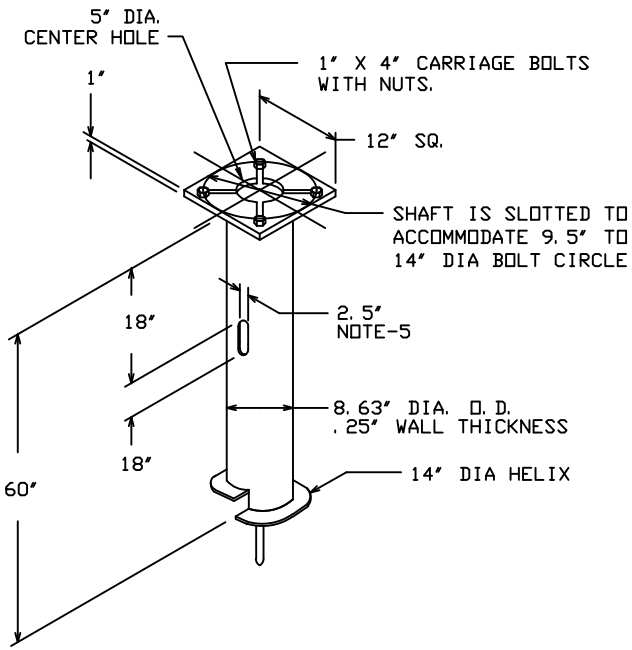

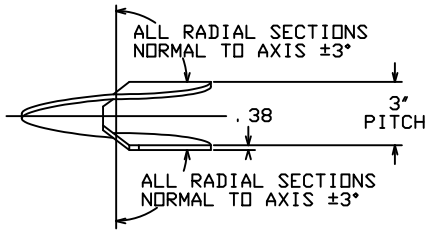

HELIX MUST BE FORMED BY MATCHING METAL DIE
(SIDE VIEW OF TRUE HELICAL FORM)

-NOTES-

1. FINISH: HOT DIP GALVANIZE PER ASTM-A153 (LATEST REVISION).
2. BASEPLATE TO BE PERPENDICULAR TO SHAFT AXIS (±1°) AND HOLE CENTERLINE CONCENTRIC (±.188) TO SHAFT AXIS.
3. STENCIL MIN. 1/2 IN. LETTERS MANUFACTURER'S NUMBER AFTER GALVANIZING.
4. PILOT POINT AND SHAFT AXES TO BE CONCENTRIC (±.125 FIM) AND IN LINE (±2°).
5. FLAME CUT TWO SLOTS IN SHAFT PERPENDICULAR TO THE BASEPLATE.
6. PREHEAT, TUMBLEBLAST, HANDGRIND, AND CLEAN BASEPLATE, HELIX, AND PILOT POINT ON ALL WELDED AREAS.
7. FLAMECUT IRREGULARITIES PERMISSIBLE: (1) VALLEYS NOT TO EXCEED 3/32 IN. BELOW NOMINAL SURFACE LEVEL, (2) PEAKS OR POSITIVE IRREGULARITIES NOT TO EXCEED 1/32 IN. ABOVE NOMINAL SURFACE LEVEL OR INTERSECTIONS OF NOMINAL SURFACES.
8. MANUFACTURER TO HAVE IN EFFECT INDUSTRY RECOGNIZED WRITTEN QUALITY CONTROL FOR ALL MATERIALS AND MANUFACTURING PROCESSES.
9. ALL MATERIAL IS TO BE NEW, UNUSED AND MILL TRACEABLE MEETING THE FOLLOWING SPECIFICATIONS:

   BASEPLATE: ASTM A36-(LATEST REVISION) STRUCTURAL STEEL (CONFORM TO AASHTO TECH. BUL. #270).

   SHAFT: ASTM A252-(LATEST REVISION) GRADE 2, STEEL PIPE PILES. ALTERNATE MATERIAL: ASTM A53-(LATEST REVISION) TYPE E OR S, GRADE B, STEEL PIPE OR ASTM A500-(LATEST REVISION) GRADE B, STRUCTURAL STEEL TUBING.

   HELIX: ASTM A635-(LATEST REVISION) 3/8" THICK HOT ROLLED STEEL PLATE OR COIL.

   PILOT POINT: ASTM A575-(LATEST REVISION) 1-1/4" DIAMETER HOT ROLLED STEEL BAR.

   BOLTS: CARRIAGE BOLT 1-8UNC-2A PER ANSI B-18.5, SAE J429 GRADE-5.

   NUTS: HEAVY HEX NUT PER ASTM A194 GRADE 2H OR ASTM A563 GRADE DH, MEETING SUPPLEMENTARY REQQUIREMENTS OF ASTM A563, 1-8UNC-2B PER ANSI B18.2.2.
10. BASEPLATE IS PERMANENTLY STAMPED WITH MANUFACTURER'S IDENTIFICATION "ABC" IN 1/2" LETTERS AND DATE CODE IN 1/4" LETTERS.
11. BASEPLATE PERMANENTLY MARKED TO INDICATE CABLEWAY OPENING IN SHAFT.

LIGHTING FOUNDATION
CAT. NO. T112-0566

CHANCE®

CONFIDENTIAL: THIS DRAWING AND ITS CONTENTS ARE CONFIDENTIAL AND THE EXCLUSIVE PROPERTY OF HUBBELL POWER SYSTEMS. NO PUBLICATION, DISTRIBUTION OR COPIES MAY BE MADE WITHOUT THE WRITTEN CONSENT OF HUBBELL POWER SYSTEMS. HUBBELL POWER SYSTEMS UNPUBLISHED ALL RIGHTS RESERVED UNDER THE COPYRIGHT LAWS.

HUBBELL® POWER SYSTEMS

TITLE: LIGHTING FOUNDATION

SIZE	DWG NO.	REV
SB	SA112-0566	B

DO NOT SCALE THIS DRAWING	DRN BY KSH	DATE 11/1/04	SHEET 1/1

145