==NOTES==

1. ALL BRACKET MATERIAL IS ALUMINUM. BOLTS, NUTS AND WASHERS ARE GALVANIZED STEEL.
2. ONE STAINLESS STEEL GROUNDING LUG IS ASSEMBLED TO CLUSTER MOUNT. IT CAN BE RELOCATED AS DESIRED FOR EASY ATACHMENT OF GROUND WIRE.
3. EACH CLUSTER MOUNT INCLUDES DETAILED INSTALATION INSTRUCTIONS AND POLE TAPE WHICH AIDS IN CONVENIENT ON THE GROUND ADJUSTMENT BEFORE HANGING ON POLE.

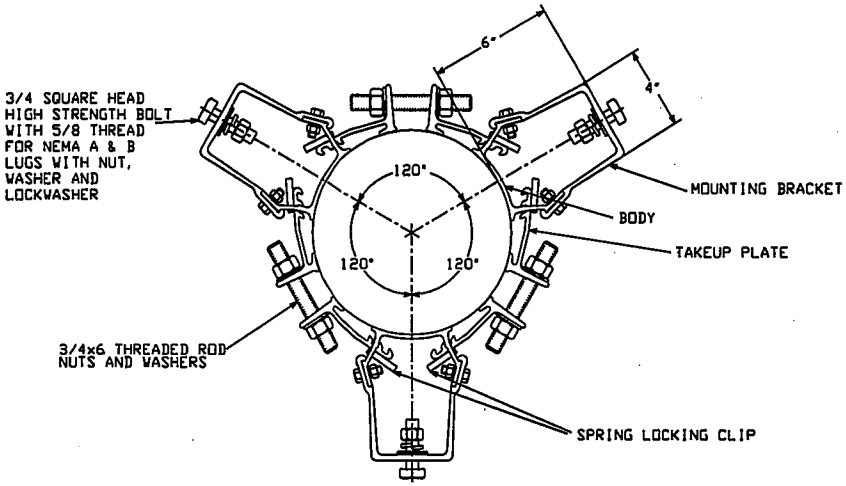

ASSEMBLED CLUSTER MOUNT

CATALOG NUMBER: C15M3-6-3D4-36

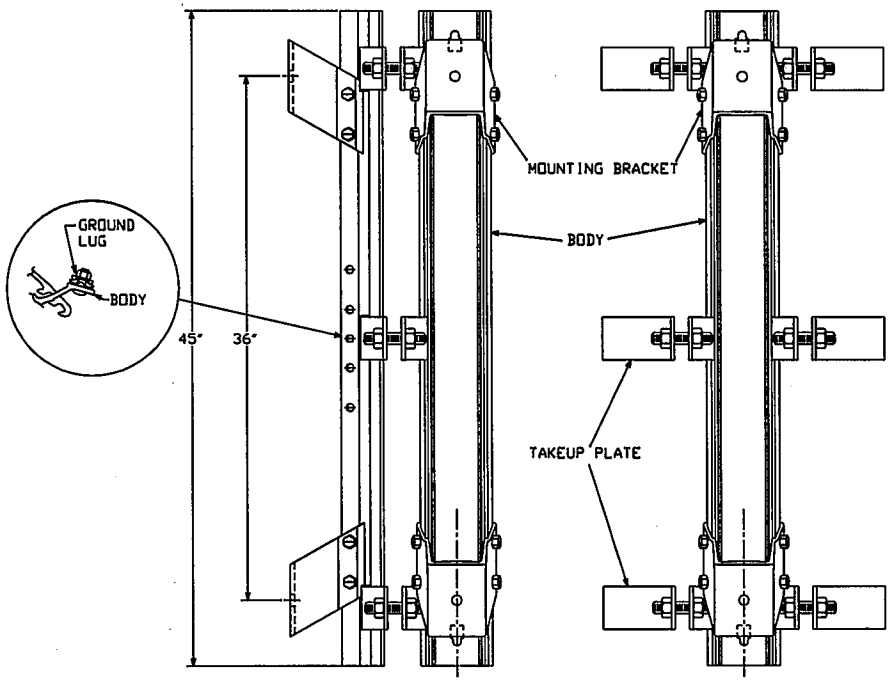

CLUSTER MOUNT AS SHIPPED

CHANCE®
TOLERANCE CHART
EC 08564

CONFIDENTIAL: THIS DRAWING AND ITS CONTENTS ARE CONFIDENTIAL AND THE EXCLUSIVE PROPERTY OF HUBBELL POWER SYSTEMS. NO PUBLICATION, DISTRIBUTION OR COPIES MAY BE MADE WITHOUT THE WRITTEN CONSENT OF HUBBELL POWER SYSTEMS. HUBBELL POWER SYSTEMS UNPUBLISHED ALL RIGHTS RESERVED UNDER THE COPYRIGHT LAWS.

HUBBELL® POWER SYSTEMS

TITLE: MOUNT, JUMBO CLUSTER

SIZE	DWG NO.	CAT / PART / ASSY NO.	REV
SB	SA15M3-6-3D4-36	C15M3-6-3D4-36	A

DO NOT SCALE THIS DRAWING	DRN BY JOBE	DATE 10/31/03	SHEET 01 OF 01