NOTES:

1.) MATERIAL: ALUMINUM (RACK BODY)
GALVANIZED STEEL (HARDWARE)
2.) ASSEMBLED COMPLETE AS SHOWN.

CATALOG NUMBER	"A"	"B"
C3SPR66	66"	33"
C3SPR84	84"	42"

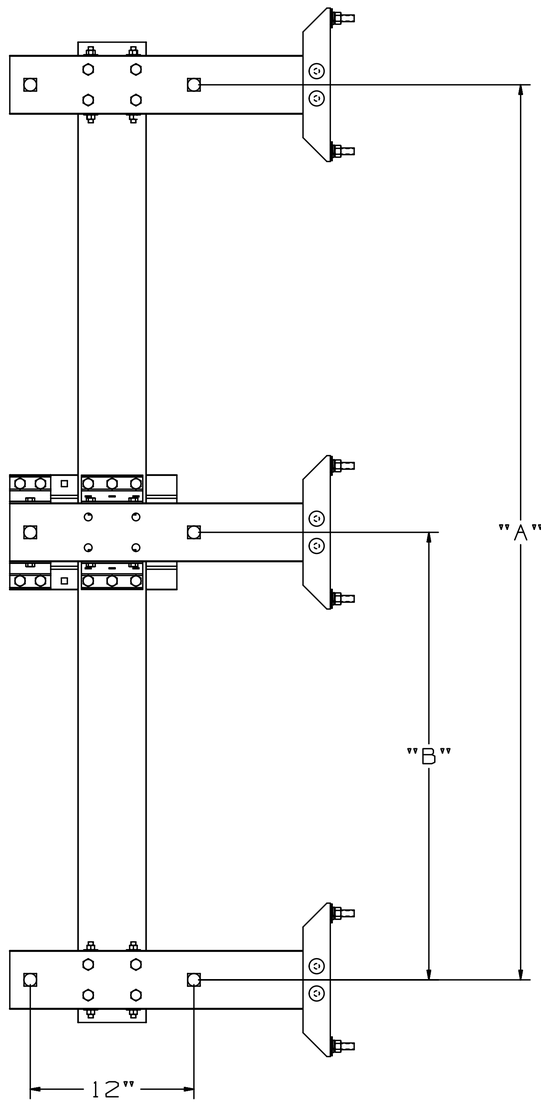

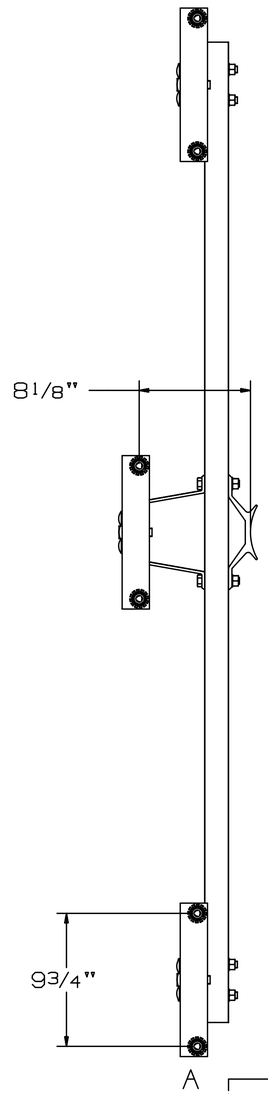

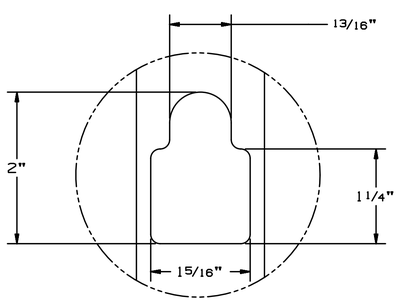

DETAIL C

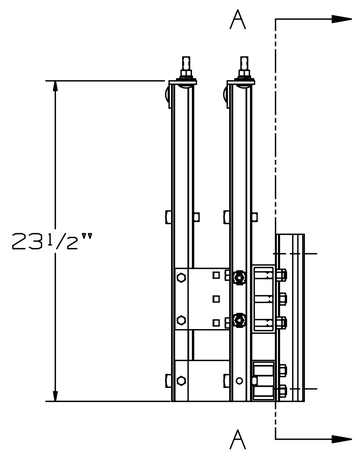

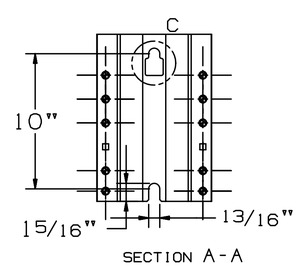

SECTION A-A

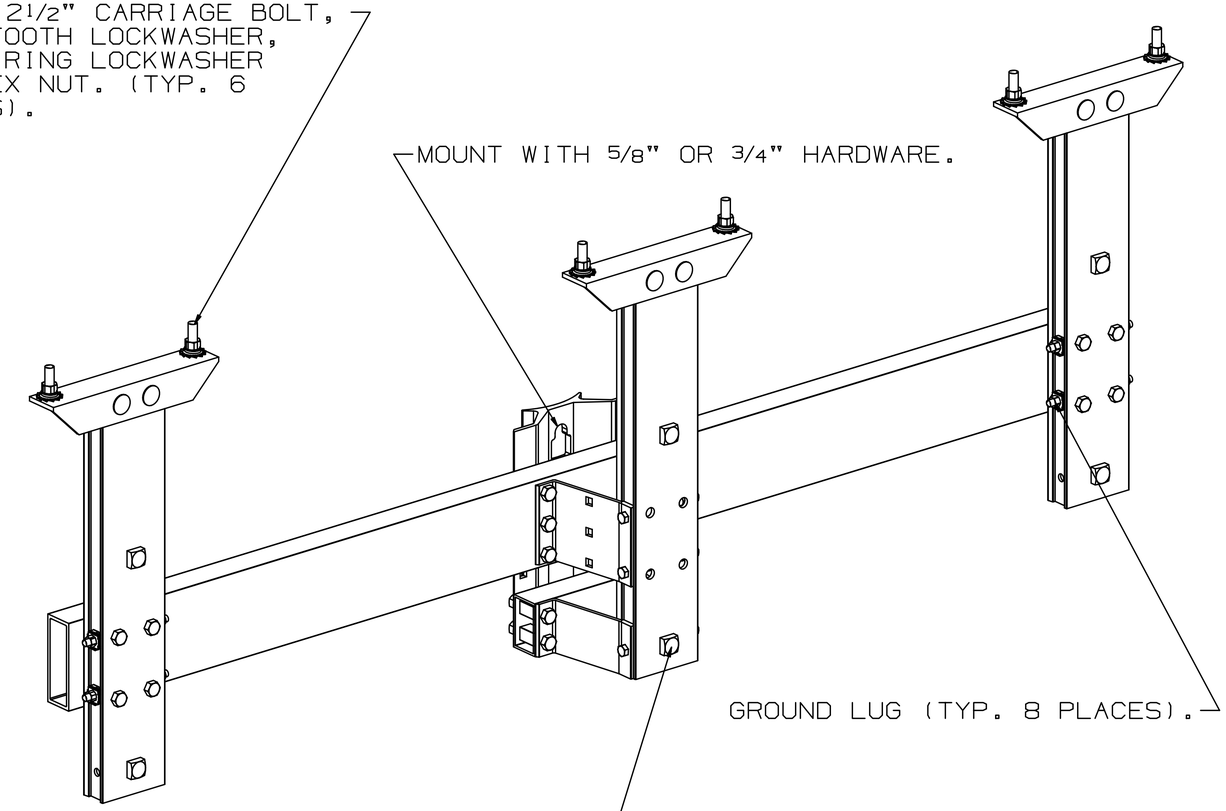

LATEST EC NO:	REV.	DATE	CHANGED BY	RESP ENGINEER
----------	-	--------	------	------

DO NOT SCALE THIS DWG

THIRD ANGLE PROJECTION

ISO DUAL DIMENSIONS
IN=INCH, MM=MILLIMETER

DRN BY:	DATE	TITLE:	SIZE
JJL	12-05-12	RECLOSER MOUNT	D

HUBBELL POWER SYSTEMS CHANCE

DWG NO: SAC3SPR-66

CONFIDENTIAL: THIS DRAWING AND ITS CONTENTS ARE CONFIDENTIAL AND THE EXCLUSIVE PROPERTY OF HUBBELL POWER SYSTEMS, INC. NO PUBLICATION, DISTRIBUTION OR COPIES MAY BE MADE WITHOUT WRITTEN CONSENT BY HUBBELL POWER SYSTEMS, INC. © 2012 HUBBELL POWER SYSTEMS. UNPUBLISHED, ALL RIGHTS RESERVED UNDER THE COPYRIGHT LAWS