REV	DATE	DESCRIPTION	ECO	BY	C'H'K.
B	03/11/2022	PENETROX DETAIL AND TEMPLATE UPDATED	220309017818	PB	RG

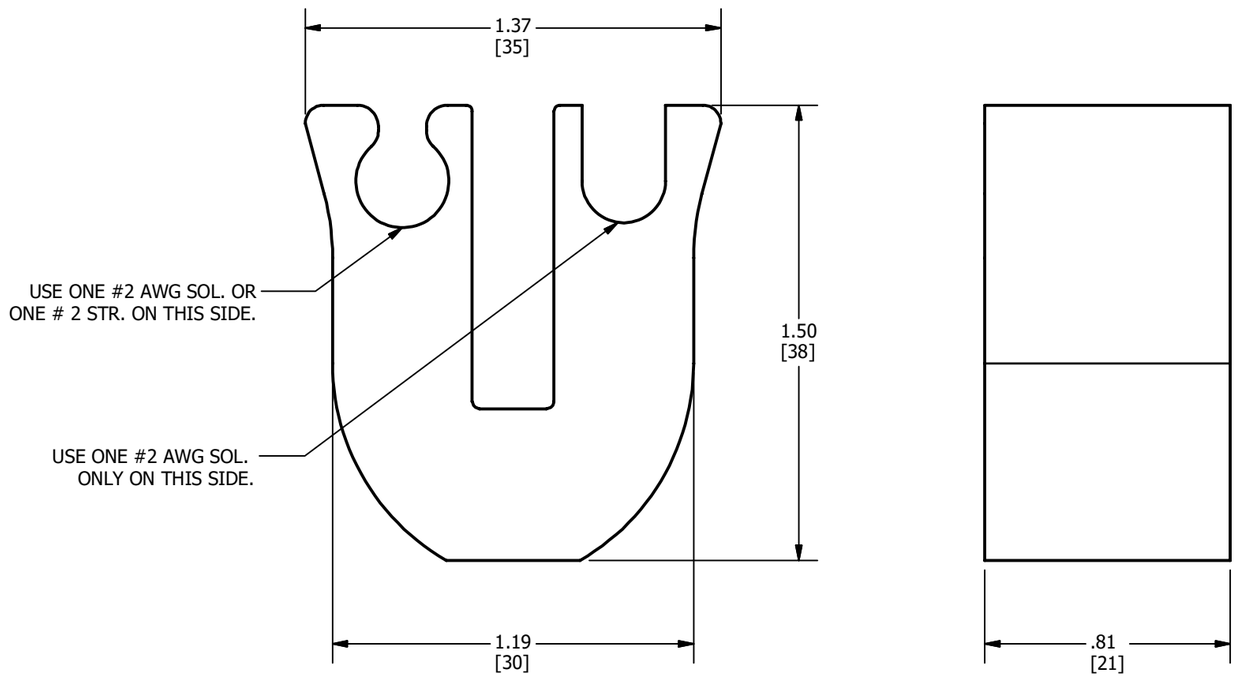

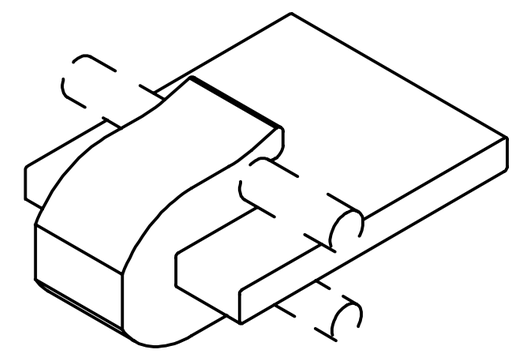

INSTALLED VIEW

NOTES:

1. MATERIAL : COPPER ALLOY.
2. CONDUCTOR AND BUSBAR GROOVES PREFILLED WITH PENETROX™ S4.
3. ACCOMMODATES : ONE #2 AWG SOL. AND/OR ONE #2 AWG SOL./STR. COPPER. TO 1/4" THICK COPPER BUSBAR.
4. INSTALLED WITH ONE CRIMP USING THE U1105 DIE SET USING THE Y750 HYPRESS TM SERIES HYDRAULIC TOOL.
5. DIMENSIONS IN BRACKETS [ ] ARE IN MILLIMETERS ROUNDED TO THE NEAREST WHOLE NUMBER. UNLESS OTHERWISE NOTED, AND ARE FOR REFERENCE ONLY.

TO ORDER BURNDY® PRODUCTS CALL

UNITED STATES
1-800-346-4175 (LONDONDERRY, NH)

CANADA:
1-800-387-6487

FOR PRODUCT INFO: http://www.burndy.com

BUSBAR CONNECTOR

ITEM NO: 25019623

CAT. NO: YG14B2TC2C2C

DRAWN BY:	D.DOBRINSKI	11/7/2000
CHECKER:	--	
DSN APRVL:	B.MACDONALD	10/19/2000
MFG APRVL:	--	10/19/2000
QA APRVL:	J.BRODEUR	10/26/2000
MKT APRVL:	R.ROBICHEAU	10/19/2000
PROD FAM:	--	
PROJECT #:	--	
DOCUMENT TYPE:	SALES	
REL LEVEL:	Released	

SIZE: B

DRAWING NO: SC212090-01

REV: B

SHEET 1 OF 1