9E61805

FIG NO.	ACCOMMODATES WIRE SIZE	ACCOMMODATES NOMINAL CIRCULAR MILS	CATALOG NUMBER	B ±.03	B.O.D. ±.03	C ±.04	L ±.06	M MIN.	N ±.02	O.D. ±.02	P ±.02	T ±.02	GAGE PIN DIA.	PIN DEPTH INSERTION MIN.	COLOR CODE
1	1/0	105600	YAG25-RSB1	.95	.64	.88	1.72	2.00	.44	.56	.44	.11	.43	.92	ORANGE
	2/0	133100	YAG26-RSB1	1.08	.72	.92	1.85	2.00	.47	.63	.46	.11	.49	1.05	BLUE
	3/0	167800	YAG27-RSB1	1.12	.79	1.02	1.98	2.00	.52	.70	.51	.13	.55	1.09	YELLOW
			YAG27-RSB2					4.00							
	4/0	211600	YAG28-RSB1	1.21	.87	1.12	2.17	2.00	.56	.77	.56	.14	.61	1.18	GREEN
			YAG28-RSB2					4.00							
1A	1/0	105600	YAG25-RSB2	.95	.64	.88	1.72	1.50	.44	.56	.44	.11	.43	.92	ORANGE
	2/0	133100	YAG26-RSB2	1.08	.72	.92	1.85	1.50	.47	.63	.46	.11	.49	1.05	BLUE
	#1	83600	YAG1C-RSB1	.95	.60	.76	1.72	1.50	.34	.51	.38	.11	.38	.92	BLACK
1	1/0	105600	YAG25-RSB3	.95	.64	.88	1.72	1.50	.44	.56	.44	.11	.43	.92	ORANGE
			YAG25-RSB5					4.50							
			YAG25-RSB6					3.50							
1	2/0	133100	YAG26-RSB4	1.08	.72	.92	1.85	4.50	.47	.63	.46	.11	.49	1.05	BLUE
1	3/0	167800	YAG27-RSB3	1.12	.79	1.02	1.98	4.50	.52	.70	.51	.13	.55	1.09	YELLOW
1	4/0	211600	YAG28-RSB3	1.21	.87	1.12	2.17	4.50	.56	.77	.56	.14	.61	1.18	GREEN
			YAG28-RSB4					4.25							

REV.	DATE	REVISION DESCRIPTION	BY	CK'D.
1	5-19-81	REV. REF. PRINT ECP3178	AJM	H.C.
2	12-82	W/ILLUSTRATION. 140R WAS .109R, 310 MIN. WAS .338 ±.030, NOTE 2 ADDED, IN TABLE O.D. TOL. ±.015 WAS ±.010 ECP3319 (SEE REV. REF. PRINT)	H.C.	CAR.
3	9-24-84	SEE REV. REF. PRINT. (DO50462)	CAR	GKL
4	2/10-86	YAG25-RSB3 ADDED (4) DO50704	TM	BKL
5	3/7/89	ALL DIMENSIONS WERE 3 PLACE DECIMALS, DELETED COPPER TUBING & ELECTRO-TIN PLATE (D.C. 20192) SPEC.	JL	D.D.
6	4/19/89	ADDED CAT. NOS YAG25-RSB5 & 6, YAG26-RSB4, YAG27-RSB3, & YAG28-RSB3 & 4 - DO51421	MAL	KH
7	24 AUG 1989	ADDED INSTALLATION TOOLING TABLE & NOTE 3. - DC20266	MAL	KH 8-2

NOTES:
1. FINISHED CRIMP. TO SHOW EMBOSSED WIRE SIZE ON TERMINAL BARREL.
2. DIMENSIONS B & L ARE MEASURED TO THE MINIMUM SIDE OF THE BELLED ENTRY.
3. USE WITH ADAPTER Y35P-1 AND DIE ADAPTER 6515.

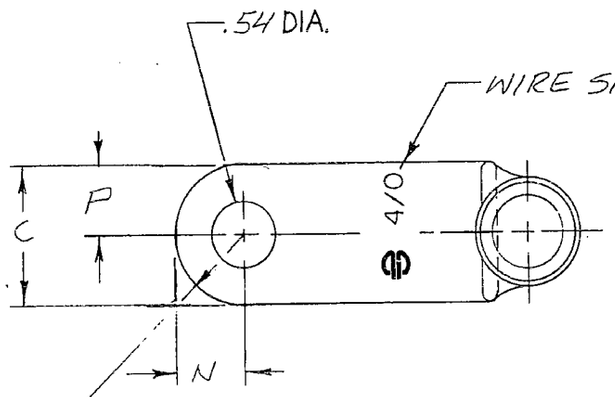

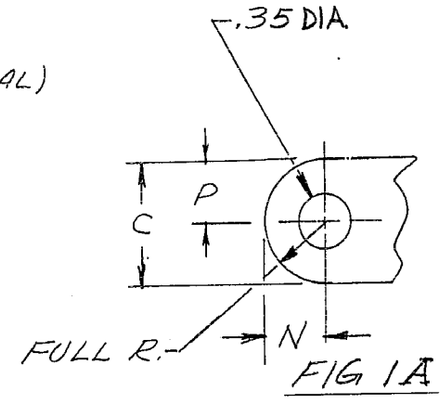

FIG 1A

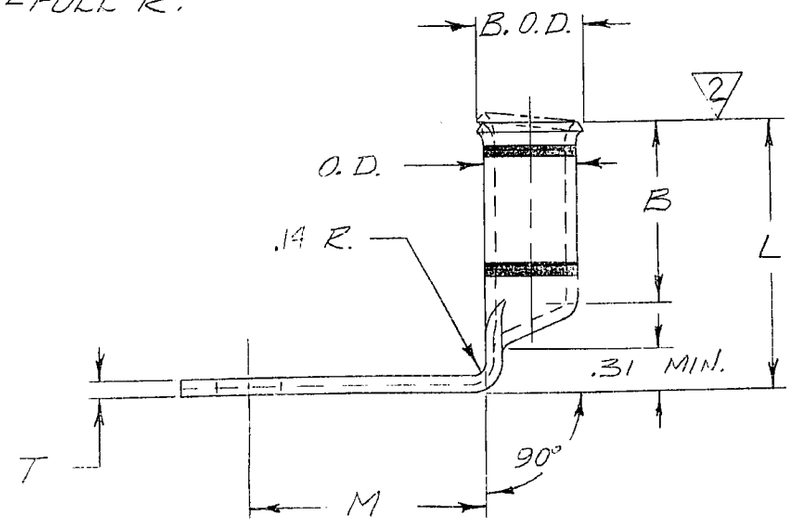

FIG. 1

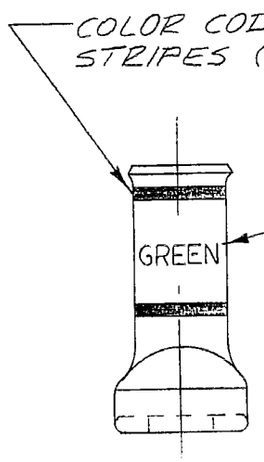

INSTALLATION TOOLING		
WIRE SIZE	Y45 HYPRESS NEST DIE CAT. NO.	INDENTOR CAT. NO.
#1	UF1CL	3 Y29PRE-2
1/0	UF25L	
2/0	UF26L	
3/0	UF27L	
4/0	UF28L	

MATERIAL:
COPPER TUBING
ELECTRO-TIN PLATED

REFERENCE:
FD84943

SD84936

© BURNDY CORPORATION 1981

90° COPPER BELLED HYLUG
CAT. NO. YAG-RSB- TABLE
SCALE NONE
DRAWN H.C. 5-8-81
CHECKED 5-11-81 CAR
DES. APPROV. [signature] 5-[illegible]
PROD. APPROV.
BURNDY NORWALK, CONN. 06856
DRAWING NO. SD84936 0039596
REV. 7

14 MAR 1988
26 APR 1989