REV	DATE	DESCRIPTION	ECO	BY	C'H'K.
A	12/16/2015	REDRAWN TO INVENTOR	42115	PV	RM

BILL OF MATERIAL PART NO. P15KP2

ITEM	PART NO.	QTY	DESCRIPTION
1	PT13600	1	CUTTING BLADE
2	PT13606	1	CUTTING BLADE HOLDER (UPPER)
3	PT207902	1	CUTTING BLADE GUIDE
4	10FX100SHCS	2	10-32UNF-3A SOCKET HEAD CAP SCREW 1.00 LG

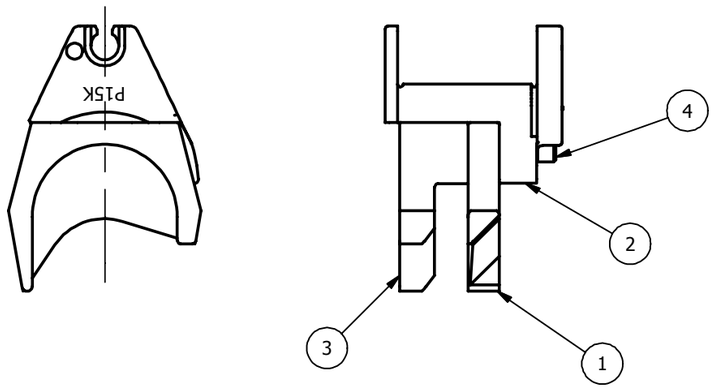

UPPER CUTTER ASS'Y
PART NO. P15KP2

BILL OF MATERIAL PART NO. P15KP1

ITEM	PART NO.	QTY	DESCRIPTION
1	PT13600	1	CUTTING BLADE
2	PT13607	1	CUTTING BLADE HOLDER (LOWER)
3	PT207902	1	CUTTING BLADE GUIDE
4	10FX100SHCS	2	10-32UNF-3A SOCKET HEAD CAP SCREW 1.00 LG

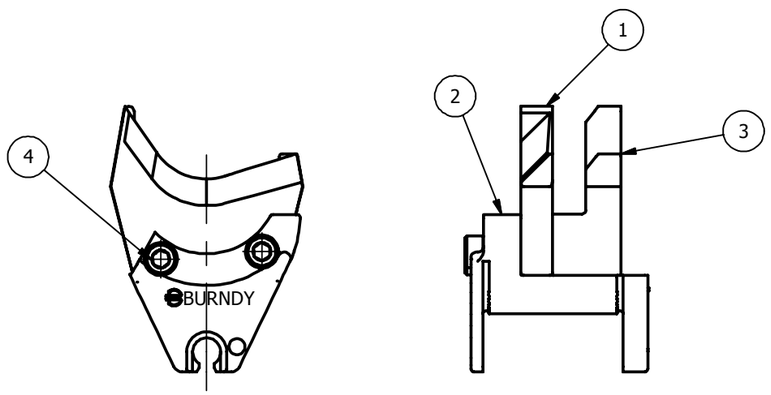

LOWER CUTTER ASSY
PART NO. P15KP1

BILL OF MATERIAL CATALOG NO. P15K

ITEM	PART NO.	QTY	DESCRIPTION
A	P15KP1	1	LOWER CUTTER ASSY
B	P15KP2	1	UPPER CUTTER ASSY
C	PT8412	1	WARNING LABEL

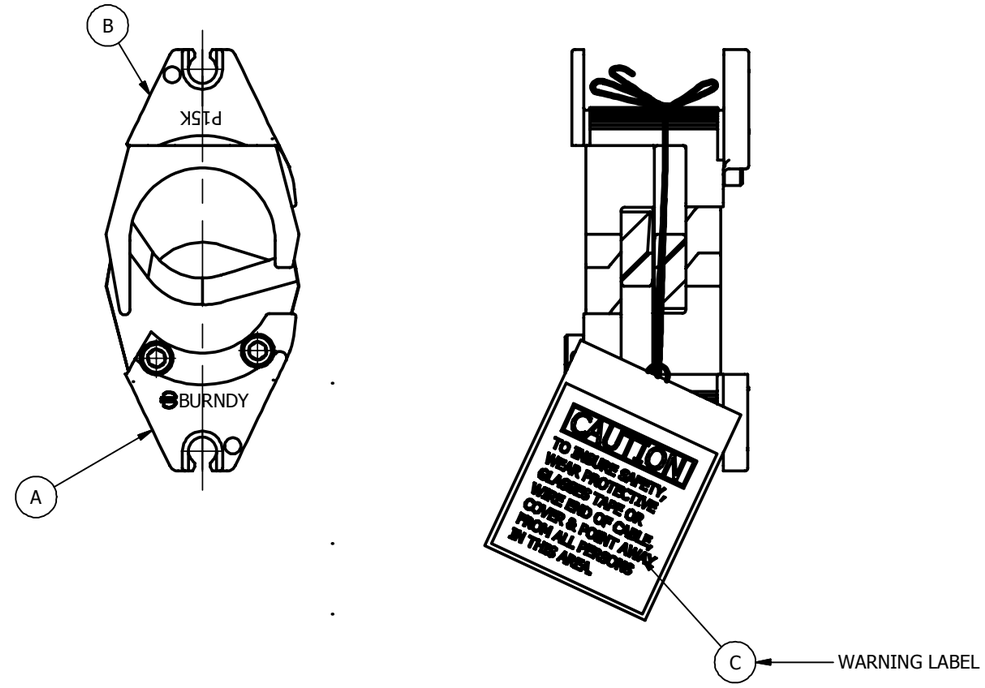

PART NO. P15K

CUTTER DIE RANGE:
MAX. .795 Kcmil ACSR
MAX. .750 Kcmil COPPER OR ALUMINUM, 1.200 INCH MAX.
DIA OVER INSULATION
MAX. 1.200 DIA. BARE COPPER OR ALUMINUM

TO ORDER BURNDY® PRODUCTS CALL

UNITED STATES
1-800-346-4175 (LONDONDERRY, NH)

CANADA:
1-800-361-6975 (QUEBEC)
1-800-387-6487 (ALL OTHER PROVINCES)

FOR PRODUCT INFO: http://www.burndy.com

CUTTING DIES

ITEM NO: 434055

CAT. NO: P15K

DRAWN BY: FGM	06-06-73	
CHECKER: FGM	06-06-73	
DSN APRVL: L BAUER	06-06-73	
MFG APRVL: --		
QA APRVL: A LLOYD	06-11-94	
MKT APRVL: M BLAKE	05-04-94	
PROD FAM: --		
PROJECT #: --		
DOCUMENT TYPE: Sales		
REL LEVEL: Released		

BURNDY

SIZE	DRAWING NO	REV
B	SD73451	A
	SHEET 1 OF 1	