DRAWING NO. SE212356

REV	DATE	DESCRIPTION	ECO	BY	C'H'K.
B	05/08/2017 00:00:00 AM	LOGO UPDATION	46692	BK	MB

CATALOG NO.	CONDUCTOR CODE (AWG)	CONDUCTOR NAVY ◁5	BOLT SIZE	FIG. NO.	DIMENSIONS B ±.08	C ±.04	H REF.	K DIA. ±.02	L ±.12	N ±.04	O.D. ±.01	T REF.	Z MIN.	INSTALLATION TOOLING (# CRIMPS) DIE INDEX	COLOR CODE	MECHANICAL MD7-34R MD6	OUR840	Y2MR ◁6	HYDRAULIC BCT500 Y500CT	Y34A ◁8	Y750 Y35, BAT35 Y39, BAT750	Y46 ◁4	Y45 ◁3	DIELESS (# CRIMPS)	WIRE STRIP LENGTH
YAZ26TC12	2/0 AWG. [70mm² STR]	125	1/2 [M12]	1	1.50 [38]	.83 [21]	--	.52 [13]	3.00 [76]	.53 [13]	.56 [14]	.12 [3]	.55 [14]	13	BLACK	W26VT W26RT (4)	W26VT W26RT (4)	----	W26VT W26RT (4)	A26R (2)	U26RT (2)	U26RT (2)	U26RT (2)	MECHANICAL, MY29-11(1) HYDRAULIC Y644, Y644M BAT644M Y644MBH, Y1000 Y1000BH (1)	1-9/16
YAZ26TC1245				2			1.78 [45]		2.72 [69]																
YAZ26TC1290				3			2.12 [54]		1.47 [37]																

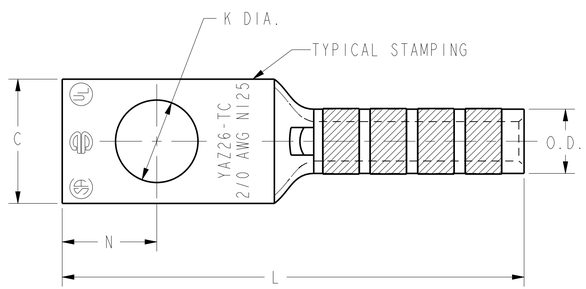

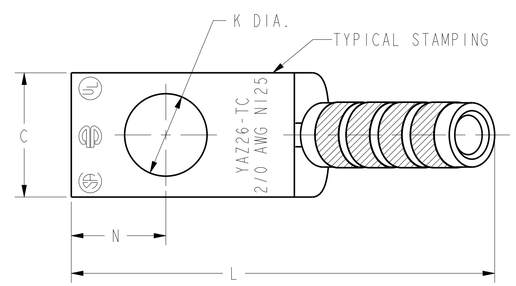

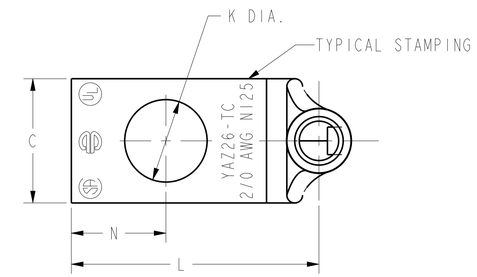

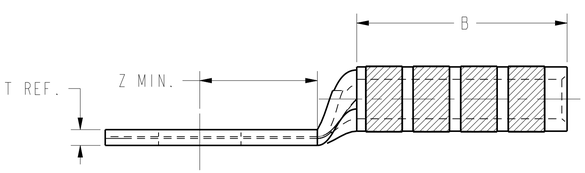

FIG. 1

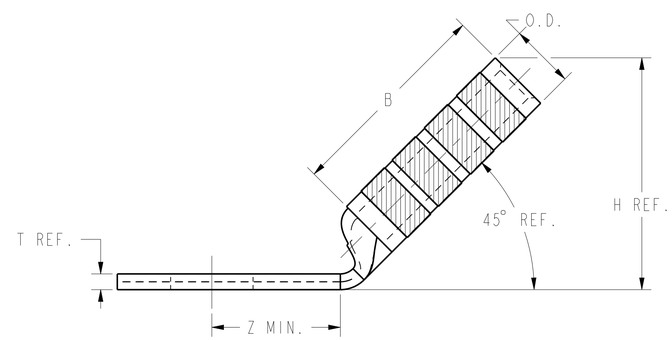

FIG. 2

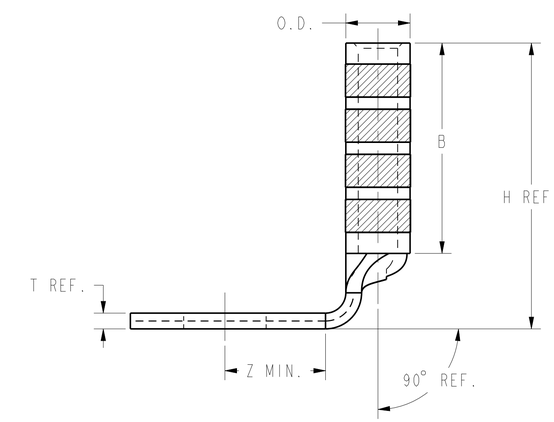

FIG. 3

NOTES:

1. MATERIAL: COPPER TUBING.
2. FINISH: TIN PLATED
3. ◁ CATALOG # PT6515 ADAPTOR IS REQUIRED TO USE "U" DIES IN Y45 SERIES TOOLS.
4. ◁ CATALOG # PUADP-1 ADAPTOR IS REQUIRED TO USE "U" DIES IN Y46 SERIES TOOLS.
5. ◁ NAVY CABLE SIZE MAY BE OMITTED ON SOME SIZES BECAUSE OF SPACE LIMITATIONS.
6. ◁ PERMANENT DIE IN TOOLING.
7. DIMENSIONS, METRIC WIRE, & METRIC BOLT SIZES IN BRACKETS [ ] ARE IN MILLIMETERS. DIMENSIONS ARE ROUNDED OFF TO THE NEAREST MILLIMETER, UNLESS OTHERWISE NOTED, AND ARE FOR REFERENCE ONLY.
8. ◁ FOR USE BY CUSTOMERS THAT HAVE THIS HYPRESS™. NO NEW Y34A HYPRESS™ TOOLS ARE BEING PROCESSED.

TO ORDER BURNDY® PRODUCTS CALL

UNITED STATES
1-800-346-4175 (LONDONDERRY, NH)

CANADA:
1-800-361-6975 (QUEBEC)
1-800-387-6487 (ALL OTHER PROVINCES)

FOR PRODUCT INFO: http://www.burndy.com

HYLUG™ (ONE HOLE CODE)

ITEM NO:	NA
CAT. NO:	YAZ26-TC- (TABLE)
DRAWN BY:	D.BOISVERT 02/03/2000
CHECKER:	K.MCCARTHY 04/05/2000
DSN APPVL:	J.MICHAUD 05/04/2000
MFG APPVL:	N/A --
QA APPVL:	S.BROWN --
MKT APPVL:	N/A --
PROD FAM:	--
PROJECT #:	--
DOCUMENT TYPE:	Sales
REL LEVEL:	Released
SIZE	D
SCALE:	NTS
DRAWING NO	SE212356
REV	B
SHEET	18 OF 40

BURNDY

REV: PE0200