DRAWING NO. SE212356

REV	DATE	DESCRIPTION	ECO	BY	C'H'K.
B	05/08/2017 00:00:00 AM	LOGO UPDATION	46692	BK	MB

CATALOG NO.	CONDUCTOR CODE (AWG)	CONDUCTOR NAVY	BOLT SIZE	FIG. NO.	DIMENSIONS B ±.08	C ±.04	H REF.	K DIA. ±.02	L ±.12	N ±.04	O.D. ±.01	T REF.	Z MIN.	INSTALLATION TOOLING (# CRIMPS) DIE INDEX	COLOR CODE	MECHANICAL MD7-34R	HYDRAULIC BCT500 Y500CT	Y750 Y35, BAT35 Y39, BAT750	Y46 ◁4	Y45 ◁3	Y48B	Y60B	DIELESS (# CRIMPS)	WIRE STRIP LENGTH
YAZ33TC12	450 kcmil [--------]	---	1/2 [M12]	1	2.12 [54]	1.48 [38]	--	.52 [13]	3.95 [100]	.53 [13]	1.01 [26]	.21 [5]	.55 [14]	326 OR 538	GRAY	W33VT (4)	W33RT (4)	W33RT (4)	U33RT (4)	U33RT (4)	---	L33RT (1)	HYDRAULIC: Y644, Y644M BAT644M Y644MBH, Y1000 Y1000BH (1)	2-5/16
YAZ33TC1245				2			2.79 [71]		3.60 [91]															
YAZ33TC1290				3			3.22 [82]		1.75 [44]															

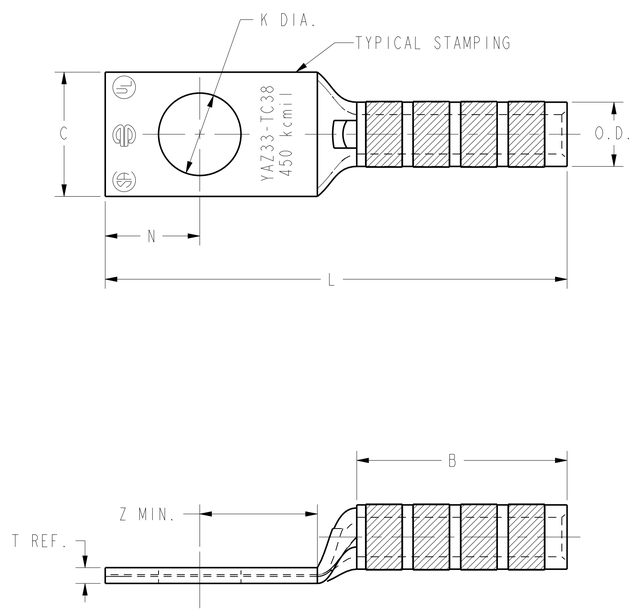

FIG. 1

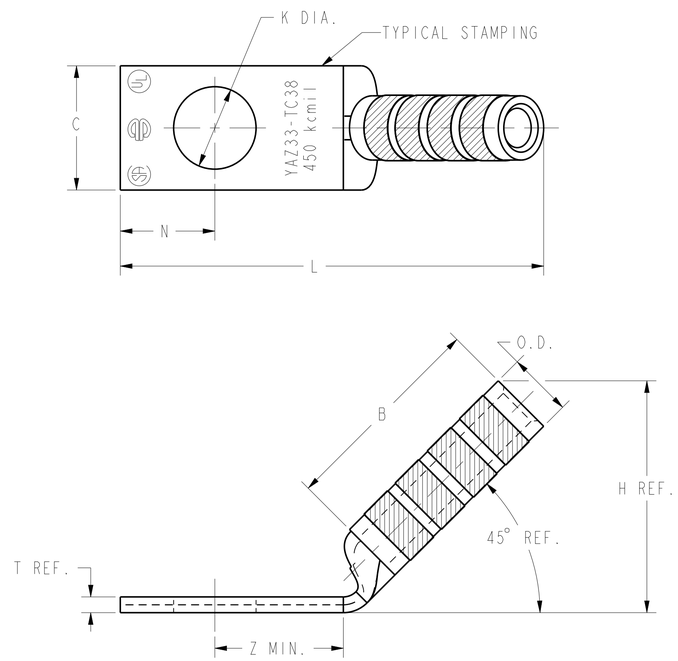

FIG. 2

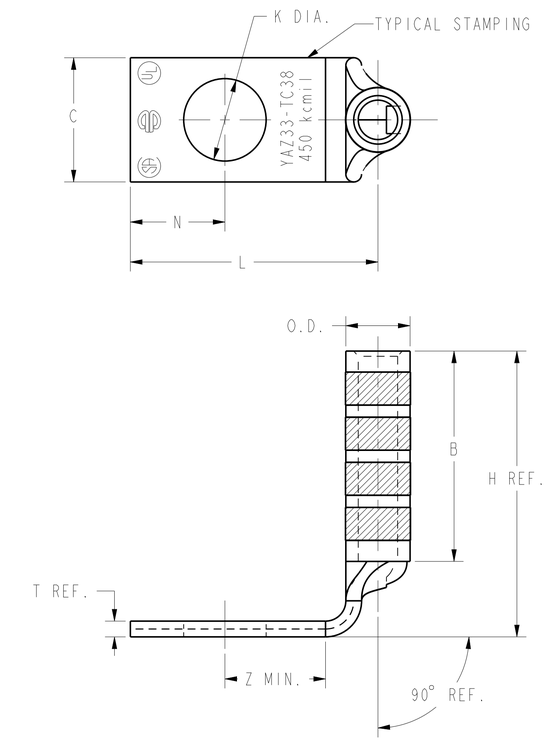

FIG. 3

NOTES:

1. MATERIAL: COPPER TUBING.
2. FINISH: TIN PLATED
3. ◁3▷ CATALOG # PT6515 ADAPTOR IS REQUIRED TO USE "U" DIES IN Y45 SERIES TOOLS.
4. ◁4▷ CATALOG # PUADP-1 ADAPTOR IS REQUIRED TO USE "U" DIES IN Y46 SERIES TOOLS.
5. DIMENSIONS, METRIC WIRE, & METRIC BOLT SIZES IN BRACKETS [ ] ARE IN MILLIMETERS. DIMENSIONS ARE ROUNDED OFF TO THE NEAREST MILLIMETER, UNLESS OTHERWISE NOTED, AND ARE FOR REFERENCE ONLY.

TO ORDER BURNDY® PRODUCTS CALL

UNITED STATES
1-800-346-4175 (LONDONDERRY, NH)

CANADA:
1-800-361-6975 (QUEBEC)
1-800-387-6487 (ALL OTHER PROVINCES)

FOR PRODUCT INFO: http://www.burndy.com

HYLUG™ (ONE HOLE CODE)

ITEM NO:	NA
CAT. NO:	YAZ33-TC- (TABLE)
DRAWN BY:	D.BOISVERT 02/03/2000
CHECKER:	K.MCCARTHY 04/05/2000
DSN APPVL:	J.MICHAUD 05/04/2000
MFG APPVL:	N/A --
QA APPVL:	S.BROWN --
MKT APPVL:	N/A --
PROD FAM:	--
PROJECT #:	--
DOCUMENT TYPE:	Sales
REL LEVEL:	Released
SIZE	D
DRAWING NO	SE212356
REV	B
SCALE:	NTS
SHEET	25 OF 40

BURNDY

REV: PE0200