DRAWING NO. SE212448

CATALOG NO.	CONDUCTOR FLEX	CONDUCTOR CODE (AWG)	BOLT SIZE	FIG. NO.	B ±.08	C +.04 -.02	H REF.	K DIA. ±.02	L ±.12	N ±.03	O.D. ±.01	T REF.	Z MIN.	DIE INDEX	COLOR CODE	MECHANICAL MD7-34R	MECHANICAL OUR840	HYDRAULIC BCT500 Y500CT	HYDRAULIC Y750, PAT750 Y35, PAT35 Y39, PAT750	HYDRAULIC Y46 ◁4	HYDRAULIC Y45 ◁3	DIELESS (# CRIMPS)	WIRE STRIP LENGTH
YAZV28NT38FX	4/0 WELD 550/24	4/0 AWG	3/8 [M10]	1	1.62 [41]	.94 [24]	--	.40 [10]	3.01 [76]	.41 [10]	.77 [20]	.14 [4]	.42 [11]	15	PURPLE	W28VT X28RT W28RT (4)	X28RT W28VT (4)	W28VT X28RT W28RT (4)	U28RT (2)	U28RT (2)	U28RT (2)	MECHANICAL: MY29- 11(1) HYDRAULIC: Y644, Y644M PAT644, Y644MBH (1) Y81KFT- PAT81KFT- Y4PC- PAT4PC- SERIES (2)	1-11/16
YAZV28NT38FX45				2			2.12 [54]		2.71 [69]														
YAZV28NT38FX90				3			2.43 [62]		1.32 [34]														
YAZV28TC38FX			3/8 [M10]	1		1.14 [29]	--	.40 [10]	3.01 [76]	.41 [10]			.42 [11]										
YAZV28TC38FX45				2			2.12 [54]		2.71 [69]														
YAZV28TC38FX90				3			2.43 [62]		1.32 [34]														
YAZV28TC12FX			1/2 [M12]	1			--	.52 [13]	3.26 [83]	.53 [13]			.55 [14]										
YAZV28TC12FX45				2			2.12 [54]		2.96 [75]														
YAZV28TC12FX90	4/0 WELD 550/24	4/0 AWG		3	1.62 [41]	1.14 [29]	2.43 [62]		1.58 [40]		.77 [20]	.14 [4]		15	PURPLE	W28VT X28RT W28RT (4)	X28RT W28VT (4)	W28VT X28RT W28RT (4)	U28RT (2)	U28RT (2)	U28RT (2)		1-11/16
YAZV28TC58FX			5/8 [M16]	1			--	.69 [18]	3.51 [89]	.66 [17]			.67 [17]										

REV	DATE	DESCRIPTION	ECO	BY	CHK.
C	12/16/2013 11:26:00 AM	DRAWING RELEASED --	34098	GV	MB

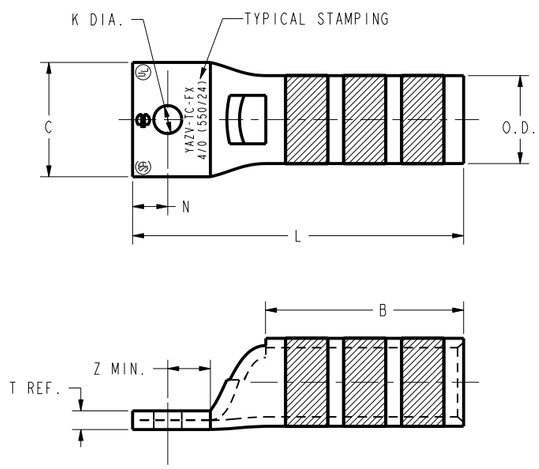

FIG.1

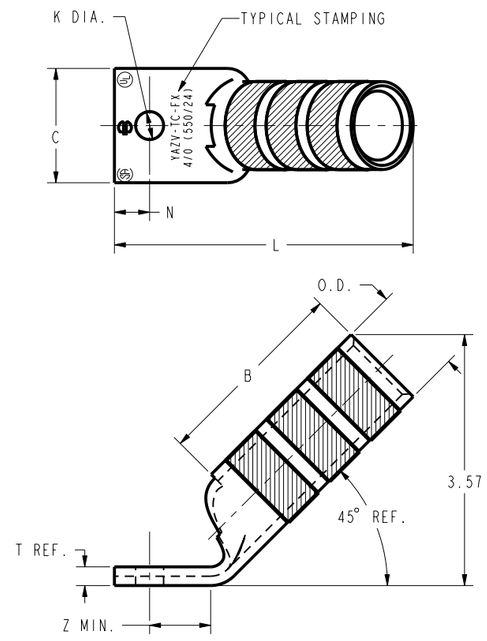

FIG.2

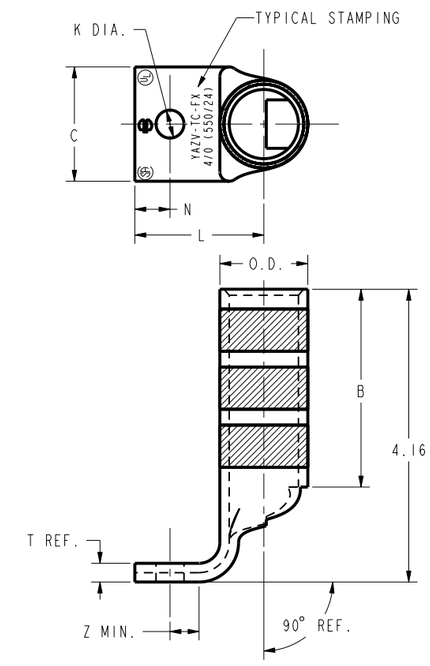

FIG.3

NOTES:

1. MATERIAL: COPPER TUBING.
2. FINISH: TIN PLATED
3. ◁3 CATALOG # PT6515 ADAPTOR IS REQUIRED TO USE " U" DIES IN Y45 SERIES TOOLS.
4. ◁4 CATALOG # PUADP-1 ADAPTOR IS REQUIRED TO USE " U" DIES IN Y46 SERIES TOOLS.
5. DIMENSIONS IN BRACKETS [ ] ARE IN MILLIMETERS. DIMENSIONS ARE ROUNDED OFF TO THE NEAREST MILLIMETER, UNLESS OTHERWISE NOTED, AND ARE FOR REFERENCE ONLY.
6. UL LISTED AND CSA CERTIFIED CONNECTOR.

TO ORDER BURNDY® PRODUCTS CALL

UNITED STATES
1-800-346-4175 (LONDONDERRY, NH)

CANADA:
1-800-361-6975 (QUEBEC)
1-800-387-6487 (ALL OTHER PROVINCES)

FOR PRODUCT INFO: http://www.burndy.com

HYLUGS™ (ONE HOLE FLEX)

ITEM NO: --
CAT. NO: YAZV28-TC (TABLE)
DRAWN BY: D.BOISVERT 08/22/00
CHECKER: J.MICHAUD 08/28/00
DSN APPVL: J.MICHAUD 08/21/00
MFG APPVL: T.THRELFALL
QA APPVL: T.WATTS
MKT APPVL: J.SYLVIA
SCALE: 1:1
PROD FAM: CM&R COMPRESSION
PROJECT #: --
DOCUMENT TYPE: Sales
REL LEVEL: Released
SIZE: D
DRAWING NO: SE212448
REV: C
SHEET 9 OF 16

BURNDY

REV: PE0200