DRAWING NO.
SE211046-01

CATALOG NO.	CONDUCTOR FLEX	CONDUCTOR CODE (AWG)	BOLT SIZE	DIMENSIONS B ±.04	C +.04 −.02	H REF.	K ±.02	L REF.	N ±.03	I.D. ±.01	O.D. ±.01	T ±.01	Z MIN.	INSTALLATION TOOLING (# CRIMPS) DIE INDEX	COLOR CODE	MECHANICAL MD7-34R	MECHANICAL OUR840	MECHANICAL Y2MR (1) ◁5	HYDRAULIC Y750 Y35, Y39 PAT750	HYDRAULIC PAT46 Y46 ◁4	HYDRAULIC Y45 ◁3	DIELESS (# CRIMPS)	WIRE STRIP LENGTH
YAV10-TC516-45G1	#10	#10 AWG #12 AWG	5/16"	.38 [10]	.55 [14]	.54 [14]	.33 [8]	1.32 [34]	.34 [9]	.13 [3]	.21 [5]	.06 [2]	.52 [13]	---	---	---	---	---	---	---	---	Y8MRB-1 (1)	7/16"
YA8C-L2-45G1	#8 WELD 37/24	#8 AWG	5/16"	.43 [11]	.52 [13]	.65 [17]	.33 [8]	1.38 [35]	.34 [9]	.18 [5]	.27 [7]	.06 [2]	.52 [13]	49	RED	W8CRT (1) W8CVT (1)	X8CRT (1) W8CVT (1)	(1 CRIMP)	U8CRT (1)	U8CRT (1)	U8CRT (1)	MECHANICAL: MY29-11 (1)	1/2"
YAV6CL-TC516-FX-45G1	#6 WELD 61/24	#6 AWG	5/16"	.45 [11]	.52 [13]	.73 [19]	.33 [8]	1.44 [37]	.34 [9]	.23 [6]	.31 [8]	.07 [2]	.52 [13]	7 OR 374	BLUE	W5CRT X5CRT W5CVT (1)	X5CRT W5CVT (1)	(1 CRIMP)	U5CRT (1)	U5CRT (1)	U5CRT (1)	MECHANICAL: MY29-11 (1) HYDRAULIC: Y644M (1)	1/2"
YAV4CL-TC516-FX-45G1	#4 WELD 91/24 105/24	#4 AWG	5/16"	.51 [13]	.55 [14]	.84 [21]	.33 [8]	1.51 [38]	.34 [9]	.28 [7]	.38 [10]	.08 [2]	.52 [13]	8 OR 346	GRAY	W4CRT X4CRT W4CVT (1)	X4CRT W4CVT (1)	(2 CRIMP)	U4CRT (1)	U4CRT (1)	U4CRT (1)		1/2"
YAV2CL-TC516-FX-45G1	#2 150/24	#2 AWG	5/16"	.60 [15]	.55 [14]	1.02 [26]	.33 [8]	1.64 [42]	.34 [9]	.36 [9]	.46 [12]	.09 [2]	.52 [13]	10	BROWN	W2CRT X2CRT W2CVT (1)	W2CRT X2CRT W2CVT (1)	(2 CRIMP)	U2CRT (1)	U2CRT (1)	U2CRT (1)		11/16"

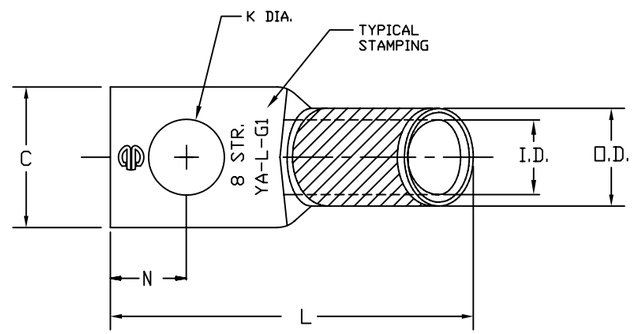

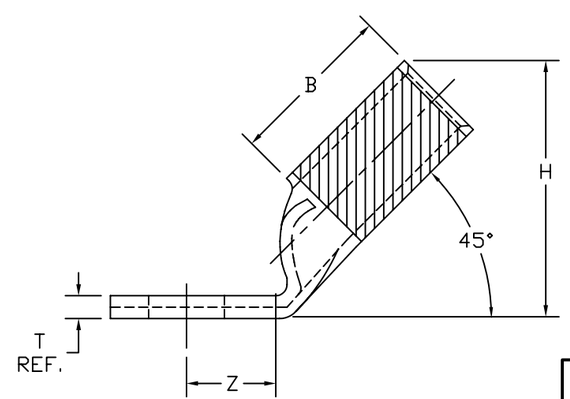

NOTES:

1. MATERIAL: COPPER TUBING.
2. FINISH: ELECTRO-TIN PLATED.
3. ◁3▷ CATALOG # PT6515 ADAPTOR IS REQUIRED TO USE "U" DIES IN Y45 SERIES TOOLS.
4. ◁4▷ CATALOG # PUADP-1 ADAPTOR IS REQUIRED TO USE "U" DIES IN Y46 SERIES TOOLS.
5. ◁5▷ PERMANENT DIE IN TOOLING.
6. DIMENSIONS IN BRACKETS [ ] ARE IN MILLIMETERS, ROUNDED OFF TO THE NEAREST MILLIMETER UNLESS OTHERWISE NOTED, AND ARE FOR REFERENCE ONLY.

REV.	DATE	DESCRIPTION	ECO	BY	C'K'D.
C	08/17/10	UPDATE HYDRAULIC COLUMN PER M/U.	21728	RB	JM

TO ORDER BURNDY® PRODUCTS CALL

UNITED STATES:
1-800-346-4175 (LONDONDERRY, NH)

CANADA:
1-800-361-6975 (QUEBEC)
1-800-387-6487 (ALL OTHER PROVINCES)

FOR PRODUCT INFO: http://www.burndy.com

HYLUG™

ITEM NO: N/A

CAT NO: YA-G1 SERIES (TABLE)

SCALE: NTS		
DRAWN BY: P LAPONIUS	8/12/97	
CHECKER: K HENRY	8/12/97	
DSN APPVL: K WOO	8/13/97	
MFG APPVL: --	--	
QC APPVL: D VARIO	8/13/97	
MKT APPVL: G SCHWEBLER	8/13/97	
PROD FAM: --		
PROJECT #: --		
DOCUMENT TYPE: Sales		
REL LEVEL: AutoCAD		

BURNDY

DRAWING NO	REV
SE211046-01	C
SIZE D	SHEET 1 OF 1