REV	DATE	DESCRIPTION	ECO	BY	C'H'K.
B	02/01/2016 09:30:00 AM	NOTE# 10 UPDATED	41185	BSB	RG

CATALOG NO.	CONDUCTOR CODE (AWG)	CONDUCTOR NAVY ◁5	BOLT SIZE	FIG. NO.	DIMENSIONS B ±.06	C ±.04	E ±.02	H REF.	K DIA. ±.02	L ±.09	N ±.04	O.D. ±.01	T REF.	Y MIN.	INSTALLATION TOOLING (# CRIMPS) DIE INDEX	COLOR CODE	MECHANICAL RATCHET MD7-34R MD6	OUR840	Y2MR ◁6	HYDRAULIC Y34A ◁8	Y750 Y35, BAT35 Y39, BAT750	Y46 ◁4	Y45 ◁3	DIELESS (# CRIMPS)	WIRE STRIP LENGTH
YAZ4C2TC38	#4 AWG [----]	40	3/8 [M10]	1	1.12 [28]	.58 [15]	1.00 [25]	----	.40 [10]	3.23 [82]	.41 [10]	.34 [9]	.08 [2]	1.43 [36]	8 OR 346	GRAY	W4CVT W4CRT (2)	W4CVT W4CRT (2)	GRAY (4)	A4CR A6CAB (2)	U4CRT U6CABT (2)	U4CRT U6CABT (2)	U4CRT U6CABT (2)	MECHANICAL: MY29-11 (1) HYDRAULIC: Y644, Y644M Y644MBH, Y1000 Y1000BH (1) 1 CRIMP	1-3/16
YAZ4C2TC3845				2				1.23 [31]		3.01 [76]															
YAZ4C2TC3890 ◁9				3				1.50 [38]		2.09 [53]															

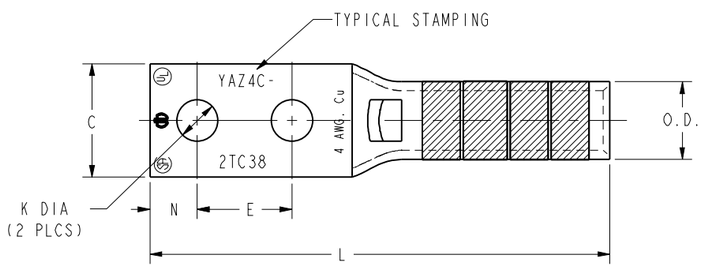

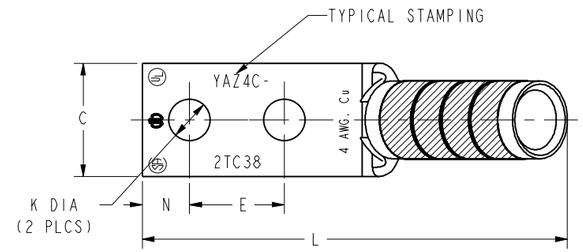

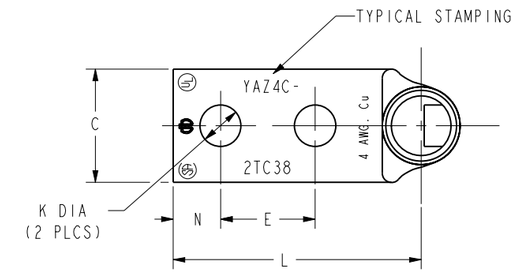

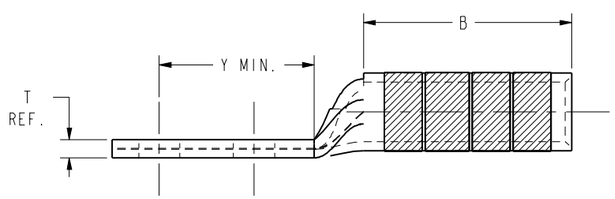

FIG 1

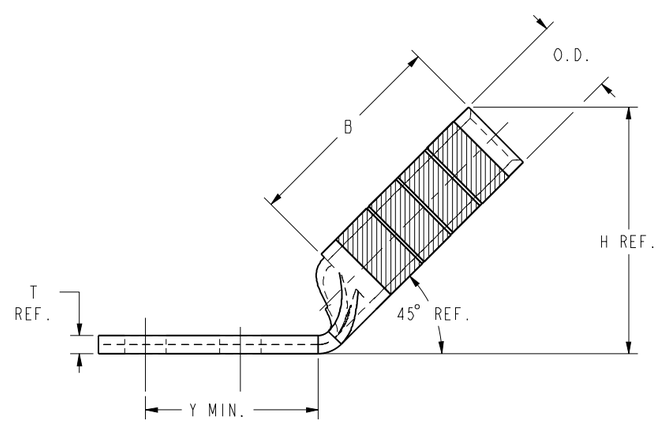

FIG 2

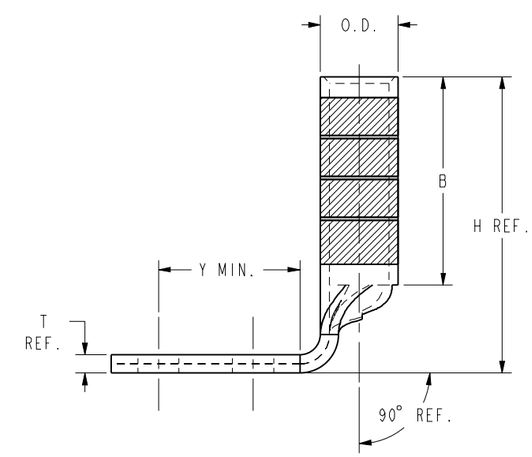

FIG 3

NOTES:

1. MATERIAL: COPPER TUBING.
2. FINISH: TIN PLATED
3. ◁ CATALOG # PT6515 ADAPTOR IS REQUIRED TO USE "U" DIES IN Y45 SERIES TOOLS.
4. ◁ CATALOG # PUADP-1 ADAPTOR IS REQUIRED TO USE "U" DIES IN Y46 SERIES TOOLS.
5. ◁ NAVY CABLE SIZE MAY BE OMITTED ON SOME SIZES BECAUSE OF SPACE LIMITATIONS.
6. ◁ PERMANENT DIE IN TOOLING.
7. DIMENSIONS, METRIC WIRE, & METRIC BOLT SIZES IN BRACKETS [ ] ARE IN MILLIMETERS. DIMENSIONS ARE ROUNDED OFF TO THE NEAREST MILLIMETER, UNLESS OTHERWISE NOTED, AND ARE FOR REFERENCE ONLY.
8. ◁ FOR USE BY CUSTOMERS THAT HAVE THIS HYPRESS.™ NO NEW Y34A HYPRESS™ ARE BEING PROCESSED.
9. ◁ THESE CATALOG NUMBERS CANNOT BE INSTALLED WITH Y45 TOOLING.

REV: PE0200

TO ORDER BURNDY® PRODUCTS CALL

UNITED STATES
1-800-346-4175 (LONDONDERRY, NH)

CANADA:
1-800-361-6975 (QUEBEC)
1-800-387-6487 (ALL OTHER PROVINCES)

FOR PRODUCT INFO: http://www.burndy.com

HYLUG™

ITEM NO:	N/A
CAT. NO:	YAZ4C-2TC- (SEE TABLE)
DRAWN BY:	D.BOISVERT 11/11/98
CHECKER:	K.HENRY 12/03/98
DSN APPVL:	B.MACDONALD 12/02/98
MFG APPVL:	N/A --
QA APPVL:	S.GARY 11/30/98
MKT APPVL:	B.HARDGROVE 11/25/98
PROD FAM:	--
PROJECT #:	--
DOCUMENT TYPE:	Sales
REL LEVEL:	Released
SIZE	D
DRAWING NO	SE211915
REV	B
SCALE:	4:1
SHEET	10 OF 36

BURNDY