M-9010 | 1

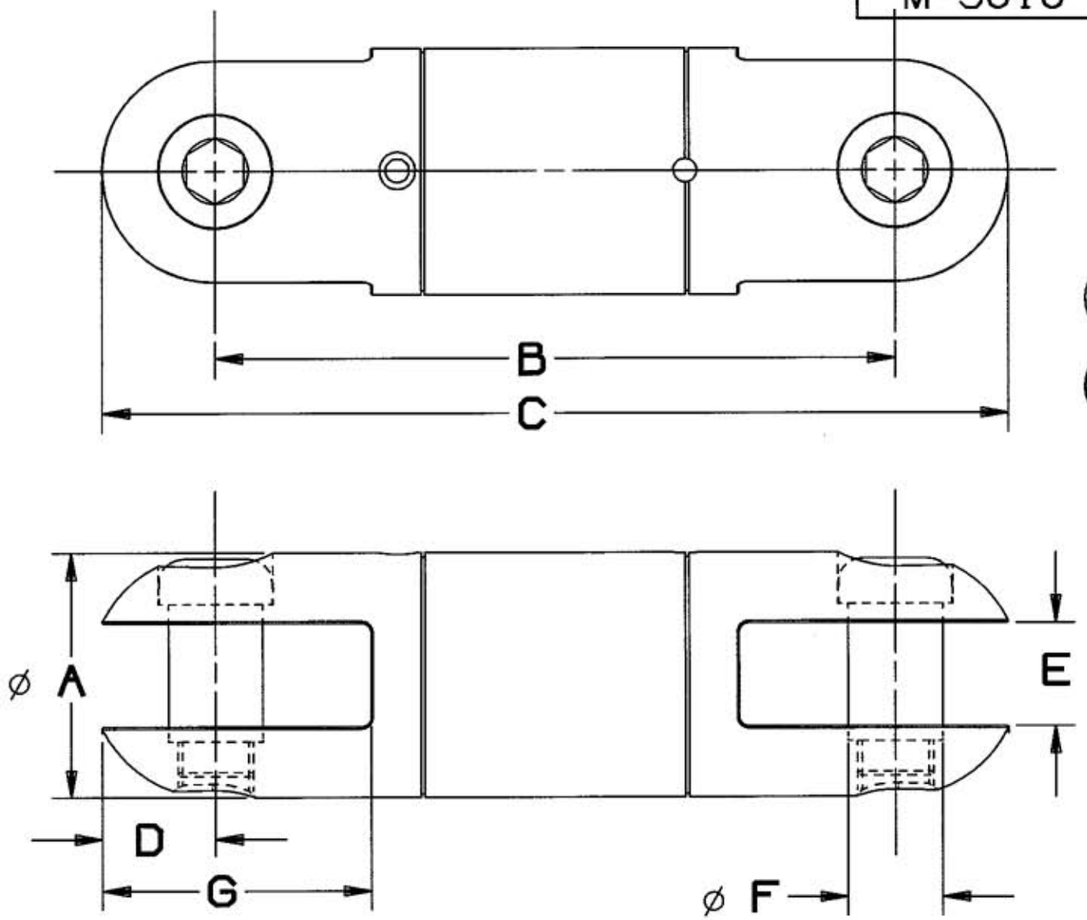

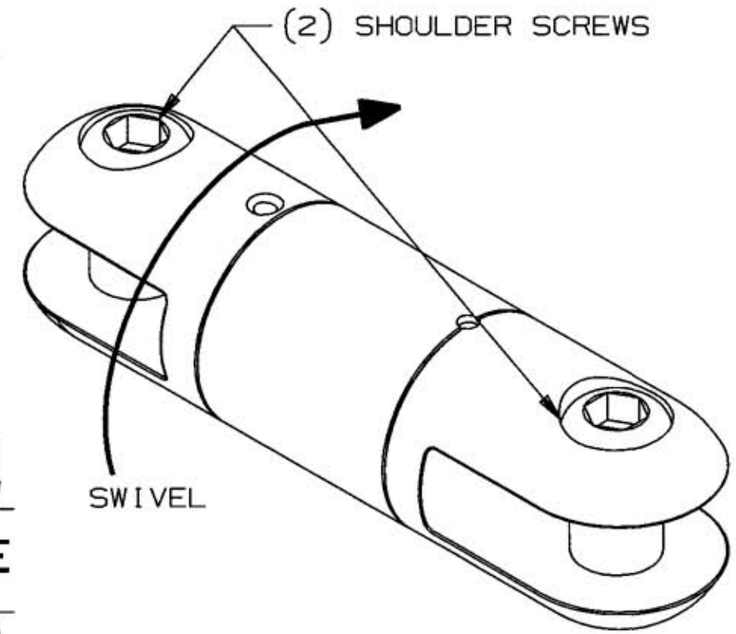

INCHES (CENTIMETERS)

Catalog Number	A	B	C	D	E	F	G	Maximum Safe Working Load Lbs (N).
20308001A	7/8 (2.22)	2-1/2(6.35)	3-3/8(8.57)	7/16(1.11)	3/8(0.95)	5/16(0.79)	31/32(2.46)	2250 (10000)
20308002A	1-1/4(3.17)	3-11/16(9.37)	4-3/4(12.06)	17/32(1.35)	17/32(1.35)	13/32(1.03)	1-9/32(3.25)	5000 (22240)
20308003A	1-1/2(3.81)	4-1/4(10.79)	5-5/8(14.29)	11/16(1.75)	19/32(1.51)	1/2(1.27)	1-9/16(3.97)	9000 (40030)
20308004A	1-5/8(4.13)	4-1/2(11.43)	6(15.24)	3/4(1.90)	11/16(1.75)	5/8(1.59)	1-23/32(4.36)	10000 (44480)
20308005A	2-3/8(6.03)	7-5/8(19.73)	10(25.40)	1-3/16(3.02)	1-1/32(2.62)	7/8(2.22)	2-25/32(7.06)	30000 (133440)

CODE 74545

LIST OF PARTS

DESCRIPTION	MATERIAL	FINISH

SYM	REVISIONS	APP	DATE
1	RELEASE NEW CATALOG NUMBERS DCN10473 GPK/FFS FFS	FFS	1/7/03

THE DESIGN AND DIMENSIONS OF THE PRODUCT SHOWN ON THIS DRAWING ARE SUBJECT TO CHANGE WITHOUT NOTICE

TITLE
SWIVEL
STAINLESS STEEL

TOLERANCES UNLESS OTHERWISE SPECIFIED
FRACTIONS ±1/64
DECIMALS ±.005
ANGLES ±2°

WIRING DEVICE-KELLEMS
HUBBELL INCORPORATED
BRIDGEPORT, CT

DR. BY	GPK	APP. BY	TCM
TR. BY		SCALE	1:1
CHK'D BY	FFS	DATE	1/2/03

DIMENSION SHEET FOR CAT. NO.

REPAIRABLE ☐ NON-REPAIRABLE ☐

B

M-9010

1