M-7120 | 3

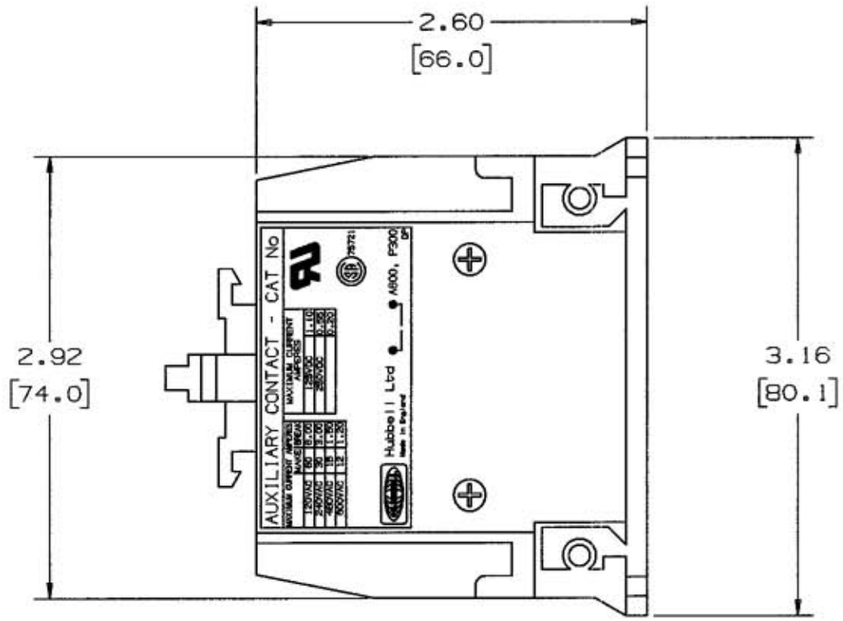

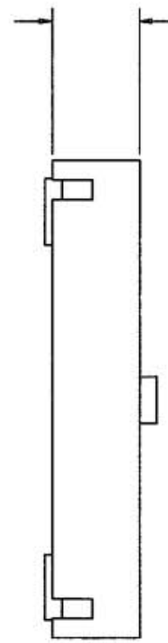

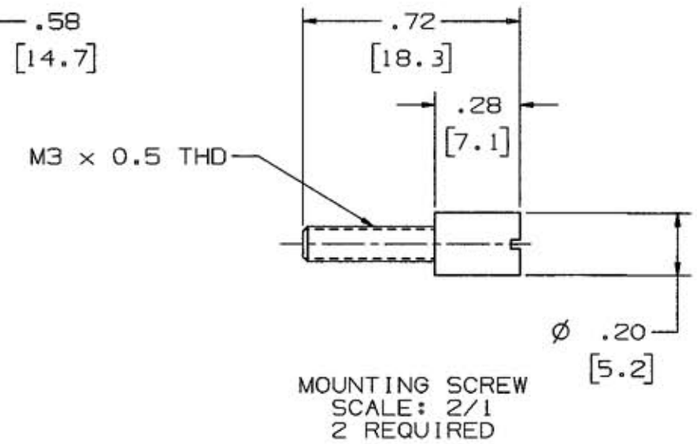

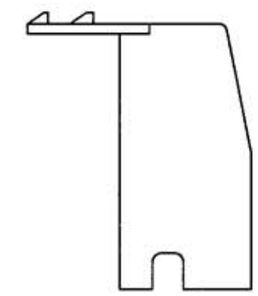

PLASTIC TERMINAL SHIELD

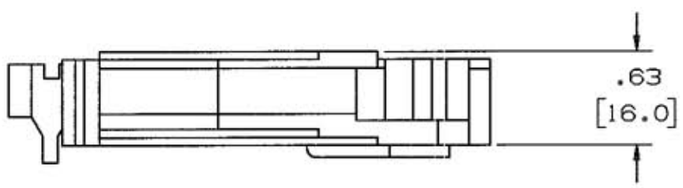

CATALOG NUMBER	NO/NC
ACFSNO	NORMALLY OPEN
ACFSNC	NORMALLY CLOSED

NOTES (UNLESS OTHERWISE SPECIFIED):

1. PILOT DUTY RATING CODE: A600
2. TERMINAL CAPACITY: 12 AWG (4 mm²)
3. TERMINAL SCREW TORQUE: 10-12 LB.-IN. (1.13-1.35 N · m)
4. AGENCY APPROVALS: U.L. RECOGNIZED, CSA APPROVED
5. CHARACTERISTICS: AUX CONTACT SWITCHES PROIR TO MAIN SWITCH; VERIFY CONTACT SEQUENCE WHEN TURNING SWTICH FROM OFF TO ON (MOUNT CONTACT ON SWITCH).
6. DIMENSIONS ARE: INCHES [MM]
7. .XX TOLERANCE TO BE ±.03 [0.76]

LIST OF PARTS

DESCRIPTION	MATERIAL	FINISH

SYM	REVISIONS	APP	DATE
3	ADDED END VIEW, TABLE, AND NOTE #7. REMOVED PARTS FROM "LIST OF PARTS", "UFS 32 & 42" FROM DWG. TITLE, AND "PART # D-55140-01 OR D-55141-01 TO VERIFY SEQUENCE." FROM NOTE #5. DUAL DIMENSIONS WERE FRACTIONAL, NOTE #6 WAS "THE ACFSNO CONTACT IS NORMALLY-OPEN; THE ACFSNC CONTACT IS NORMALLY-CLOSED.", AND "SEE TABLE" WAS "ACFSNO & ACFSNC" PER DCN #13355. JMN	DJP	1/22/07
2	UPDATED LABEL & ADDED AGENCY APPROVALS PER DCN-2366 MDM	JCA	11/3/93
1	"X" REMOVED PER DCN-2004	JCA	5/4/93

THE DESIGN AND DIMENSIONS OF THE PRODUCT SHOWN ON THIS DRAWING ARE SUBJECT TO CHANGE WITHOUT NOTICE

TITLE

AUXILIARY CONTACT

TOLERANCES UNLESS OTHERWISE SPECIFIED	
FRACTIONS	±1/64
DECIMALS	±.005
ANGLES	±2°

WIRING DEVICE-KELLEMS
HUBBELL INCORPORATED
BRIDGEPORT, CT

DR. BY MDM	APP. BY JCA
TR. BY	SCALE 1/1
CHK'D BY JCA	DATE 4/12/93

DIMENSION SHEET FOR CAT. NO. SEE TABLE

REPAIRABLE ☐ NON-REPAIRABLE ☒

B

M-7120

3

CODE 74545