M-13875	1

CONCENTRIC KNOCKOUTS **SEE NOTE 6		
LOCATION	QUANTITY	TRADE SIZE
ENDS	2/END	1/2", 3/4"
SIDES	2/SIDE	1/2", 3/4"
BOTTOM	2	1/2", 3/4"
BOTTOM	2	1", 1-1/4"

LIST OF PARTS

DESCRIPTION	MATERIAL	FINISH
BOX ASSEMBLY	16 GA. STEEL	ZINC
TOP MOUNTING ASSY	14 GA. STEEL	ZINC
GROUND WIRES	COPPER	
FASTENERS	STEEL	ZINC
FLUSH TEMP COVER	16 GA. STEEL	ZINC

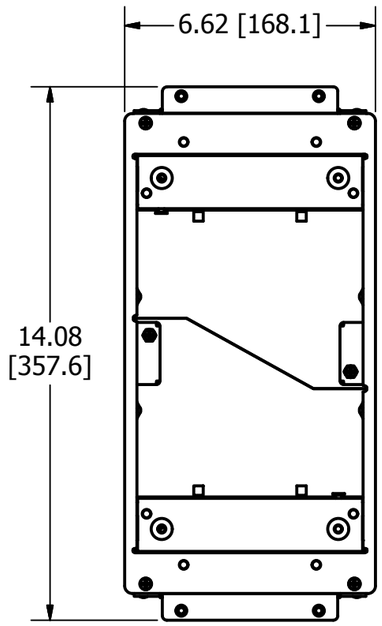

TOP VIEW
FLUSH TEMP COVER NOT SHOWN

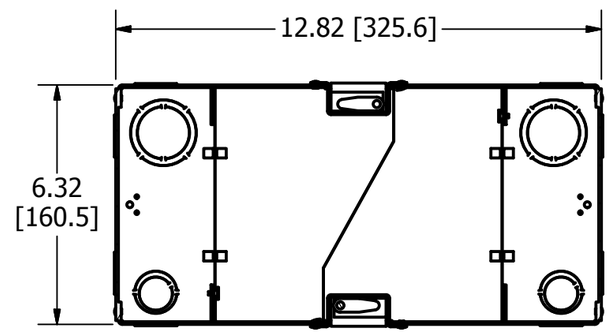

SECTION A-A
VIEW THROUGH BOX BELOW TOP

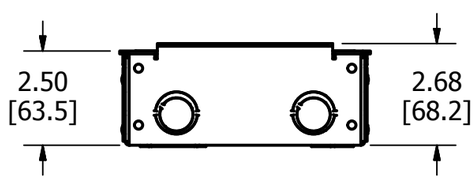

END VIEW

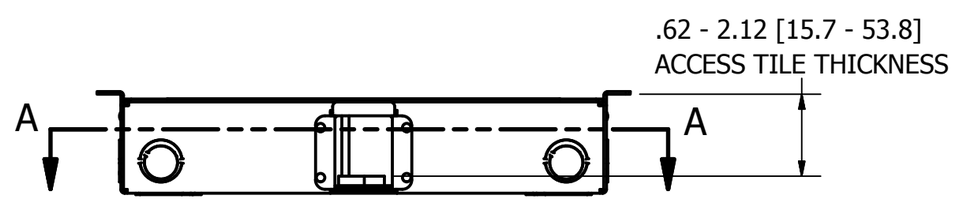

SIDE VIEW

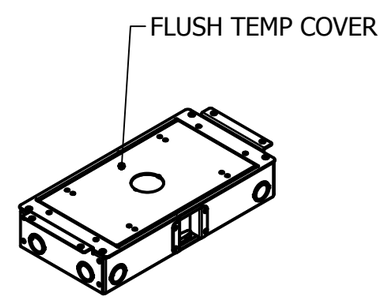

ISOMETRIC

NOTES:
1. ALL DIMENSIONS ARE IN INCHES AND [MILLIMETERS].
2. PRODUCT IS cULus LISTED. COMPLIES WITH UL 514A.
3. EACH GANG SUPPLIED WITH 6" [152.4] 12 GA. AWG GROUND PIGTAIL.
4. WIRING CHAMBER VOLUMES (RECESSED COVER) : (2) 30 IN³ [491.7 CM³].
5. WIRING CHAMBER VOLUMES (FURNITURE FEED) : (2) 78 IN³ [1288.3 CM³].
6. CATALOG AFB2G25CHI SUPPLIED WITHOUT KNOCKOUTS.

CAGE CODE 74545

REV	DESCRIPTION	APP	DATE
1	RELEASED PER DCN 23642	SBW	3/19/18

THE DESIGN AND DIMENSIONS OF THE PRODUCT SHOWN ON THIS DRAWING ARE SUBJECT TO CHANGE WITHOUT NOTICE. DIMENSIONS ARE IN INCHES [mm].

TITLE
ACCESS FLOOR BOX, 2 GANG FOR RECTANGULAR COVER, SHALLOW

WIRING DEVICE-KELLEMS
HUBBELL INCORPORATED
SHELTON, CT

TOLERANCES UNLESS OTHERWISE SPECIFIED
.XX = ± .01
.XXX= ± .005
ANGLE TOL. ±2°

DR. BY	SBW	SCALE	1/4
CHK. BY		DATE	3/5/2018

DIMENSION SHEET FOR CAT. NO.
AFB2G25, AFB2G25CHI

B

M-13875

1