M-12573 | 1

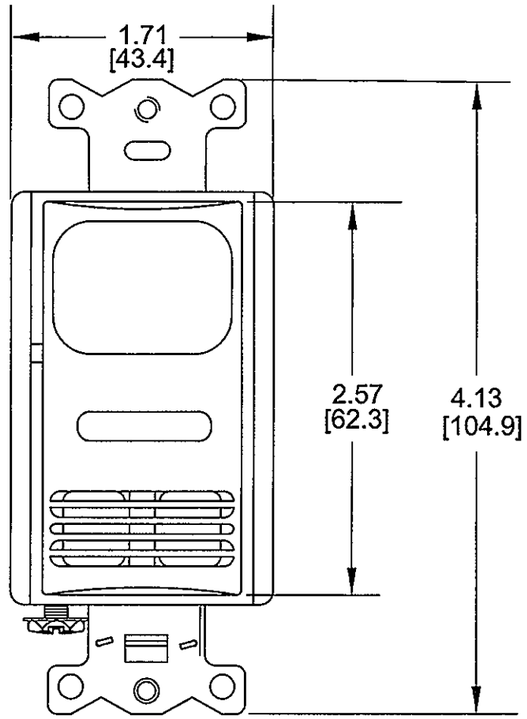

SINGLE CIRCUIT SENSOR

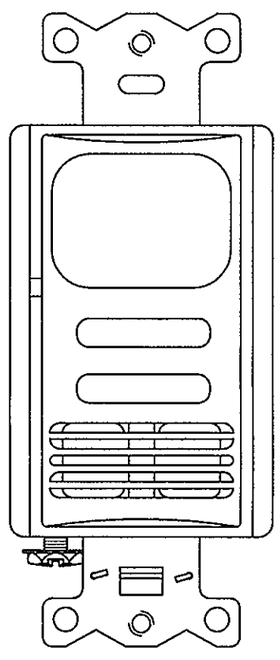

DUAL CIRCUIT SENSOR

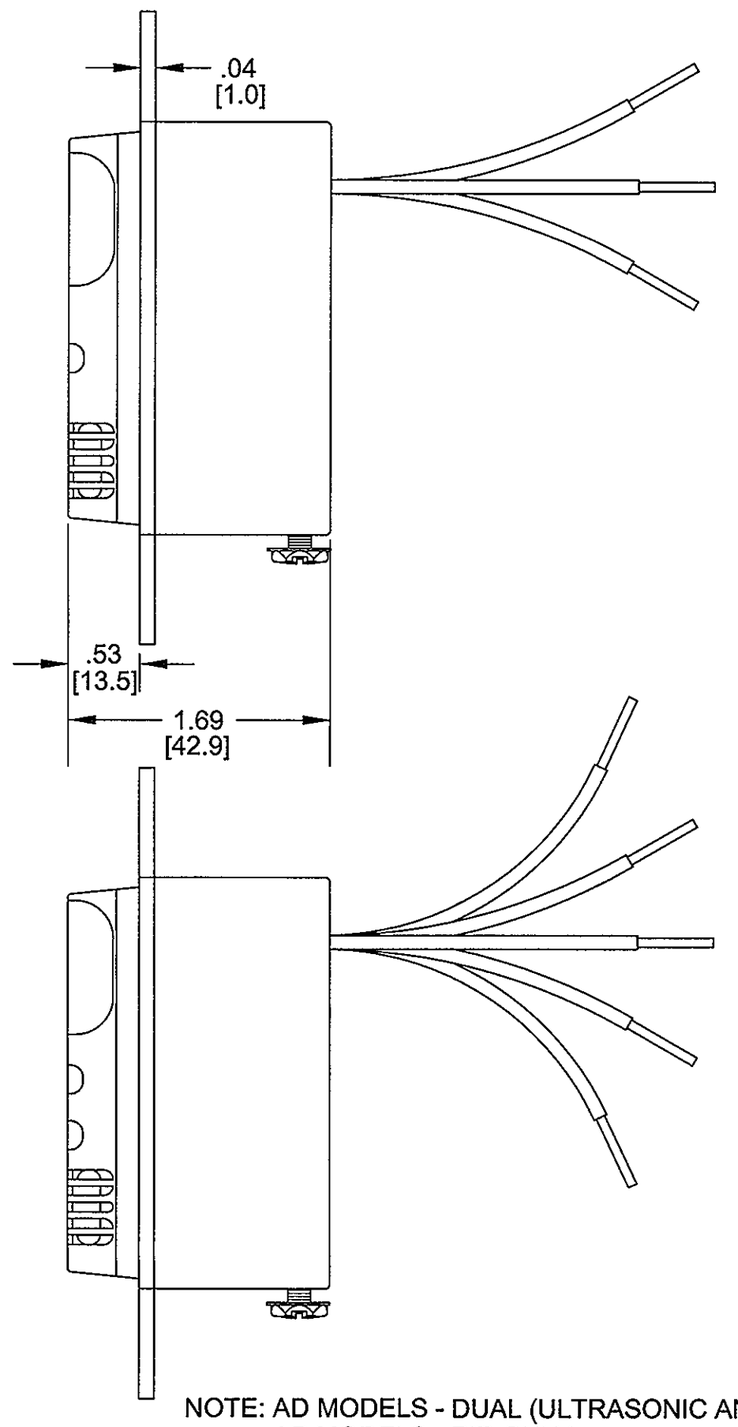

NOTE: AD MODELS - DUAL (ULTRASONIC AND PIR)
AP MODELS - PIR ONLY
AU MODELS - ULTRASONIC ONLY

LIST OF PARTS

DESCRIPTION	MATERIAL	FINISH

DIMENSION SHEET FOR CAT. NO. SEE NOTES

REPAIRABLE ☐ NON-REPAIRABLE ☒

SYM	REVISIONS	APP	DATE
1	RELEASED PER DCN 20458 SPN	DJP	5/13/14

THE DESIGN AND DIMENSIONS OF THE PRODUCT SHOWN ON THIS DRAWING ARE SUBJECT TO CHANGE WITHOUT NOTICE

TITLE
SINGLE & DUAL CIRCUIT
MOTION SENSOR SWITCHES

TOLERANCES UNLESS OTHERWISE SPECIFIED
.XX = ±.01
.XXX = ±.005
ANGLES = ±2°

WIRING DEVICE-KELLEMS
HUBBELL INCORPORATED
SHELTON, CT

DR. BY	SPN	APP. BY	DJP
TR. BY		SCALE	NONE
CHK'D BY	DJP	DATE	5/13/14

B

M-12573

1

CODE 74545