M-11904 2

| GENERAL INFORMATION | | | |
|---|---|---|---|
| WIRE LOCATION | WIRE | WIRE COLOR | WIRE SIZE (AWG) |
| 1 | LINE (L3) | BLUE | #12 |
| 2 | ISOLATED GROUND (IG) | GREEN/YELLOW | #12 |
| 3 | GROUND (G) | GREEN | #12 |
| 4 | NEUTRAL (N3) | GRAY | #12 |
| 5 | NEUTRAL (N1) | WHITE | #12 |
| 6 | LINE (L1) | BLACK | #12 |
| 7 | LINE (L2) | RED | #12 |
| 8 | NEUTRAL (N2) | WHITE/BLACK | #12 |

NOTES:

1. RATING: 20A 120/208 V.
2. ALL DIMENSIONS ARE IN INCHES [mm] EXCEPT THE FLEXIBLE METAL CONDUIT LENGTH IN FOOT.

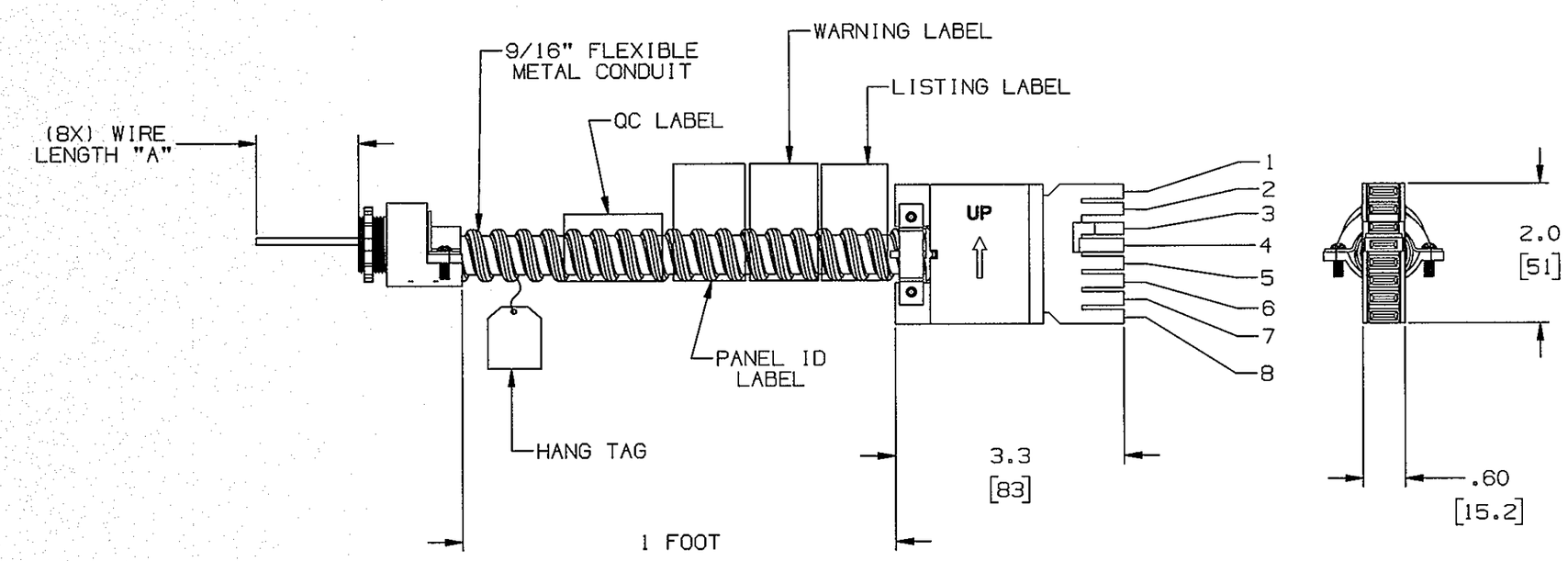


| CATALOG NUMBER | DESCRIPTION | "A" LENGTH |
|---|---|---|
| CEXT332FWL01 | EXT CABLE. 3/3/2 (3 HOTS, 3 NEUTRALS, 2 GROUNDS) FEMALE TO OPEN | 12" |
| CEXT332FWL01XP | | 18" |

LIST OF PARTS

| DESCRIPTION | MATERIAL | FINISH |
|---|---|---|
| FEMALE CONNECTOR | THERMOPLASTIC | BLACK |
| CONDUIT | GALV. STEEL | |
| CLAMP | STEEL | ZINC PLATE |
| RIVET | STEEL | ZINC PLATE |
| INSULATOR | THERMOPLASTIC | |
| WIRE | COPPER | |
| FITTING | CAST ALUM. | |

| SYM | REVISIONS | APP | DATE |
|---|---|---|---|
| 2 | ADDED FITTING PER DCN #21027. | DL | 02/05/15 |
| 1 | NEW RELEASE PER DCN #20674. | | 04/15/14 |

THE DESIGN AND DIMENSIONS OF THE PRODUCT SHOWN ON THIS DRAWING ARE SUBJECT TO CHANGE WITHOUT NOTICE

TITLE
MODULAR WIRING
EXTENDER CABLE 3/3/2
FEMALE TO OPEN WIRE

TOLERANCES UNLESS OTHERWISE SPECIFIED
.XX = ±.01
.XXX = ±.005
ANGLES = ±2°

WIRING DEVICE-KELLEMS
HUBBELL INCORPORATED
SHELTON, CT

| | |
|---|---|
| DR. BY DMP | APP. BY |
| TR. BY | SCALE NONE |
| CHK. BY | DATE 2/3/11 |

DIMENSION SHEET FOR CAT. NO. SEE TABLE

REPAIRABLE ☐ NON-REPAIRABLE ☒

B M-11904 2

CODE 74545