M-11557 | 5

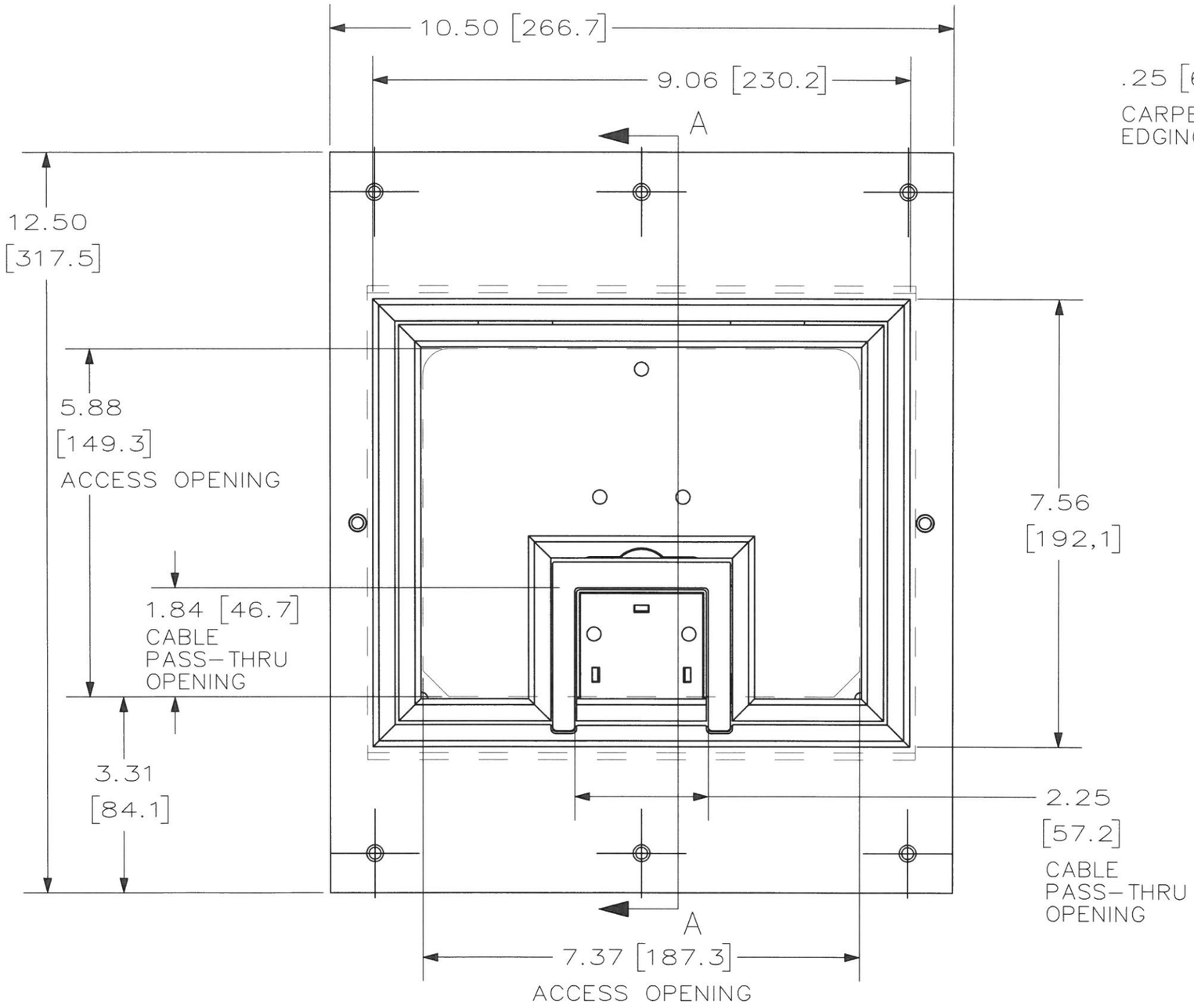

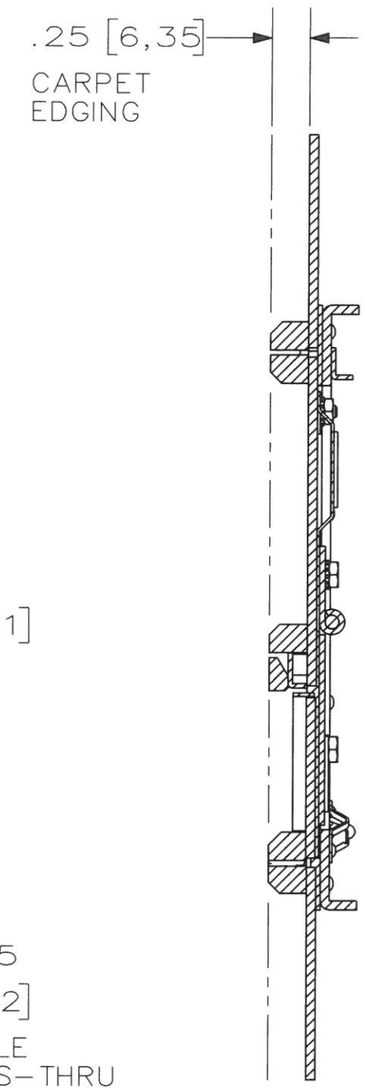

SECTION A-A

CATALOG NUMBER	CARPET EDGING MATERIAL
CFB7CVRBRS	BRASS
CFB7CVRALU	ALUMINUM

ALL DIMENSIONS ARE IN INCHES AND [MILLIMETERS]

SHT 1 OF 2

CODE 74545

LIST OF PARTS

DESCRIPTION	MATERIAL	FINISH
COVER PLATE	STEEL	ZINC
ACCESS DOOR	STEEL	ZINC
CABLE DOOR	STEEL	ZINC
TRIM	SEE CHART	
FASTENERS	STEEL	ZINC

SYM	REVISIONS	APP	DATE
5	SECTION A-A DIM .25 WAS .50 UPDATED TOP VIEW ADDED BEVELED EDGES PER DCN 23212. MYA	DDL	7/21/17
4	.50 WAS .25, 1.84 WAS 2.34, 2.25 WAS 2.51 PER DCN 21050 TF	TF	2/17/15
3	REMOVED CFB7CVRBLK AND SPECS IN TABLE PER DCN18892. MYA	DJP	5/30/12
2	ADDED CFB7CVRBLK AND SPECS TO TABLE PER DCN18851. MYA	DJP	5/16/12
1	RELEASED PER DCN16595	SRE	3/9/10

THE DESIGN AND DIMENSIONS OF THE PRODUCT SHOWN ON THIS DRAWING ARE SUBJECT TO CHANGE WITHOUT NOTICE

TITLE
FLOOR BOX COVER
CFB7 SERIES
1/4" BEVELED CARPET FLANGE

TOLERANCES UNLESS OTHERWISE SPECIFIED
.XX = ±.01
.XXX = ±.005
ANGLES = ±2°

WIRING DEVICE-KELLEMS
HUBBELL INCORPORATED
SHELTON, CT

DR. BY SRE	APP. BY
TR. BY	SCALE 1:2
CHK. BY	DATE 3/9/10

DIMENSION SHEET FOR CAT. NO. SEE CHART

REPAIRABLE ☐ NON-REPAIRABLE ☒

B

M-11557

5

M-11557 | 5

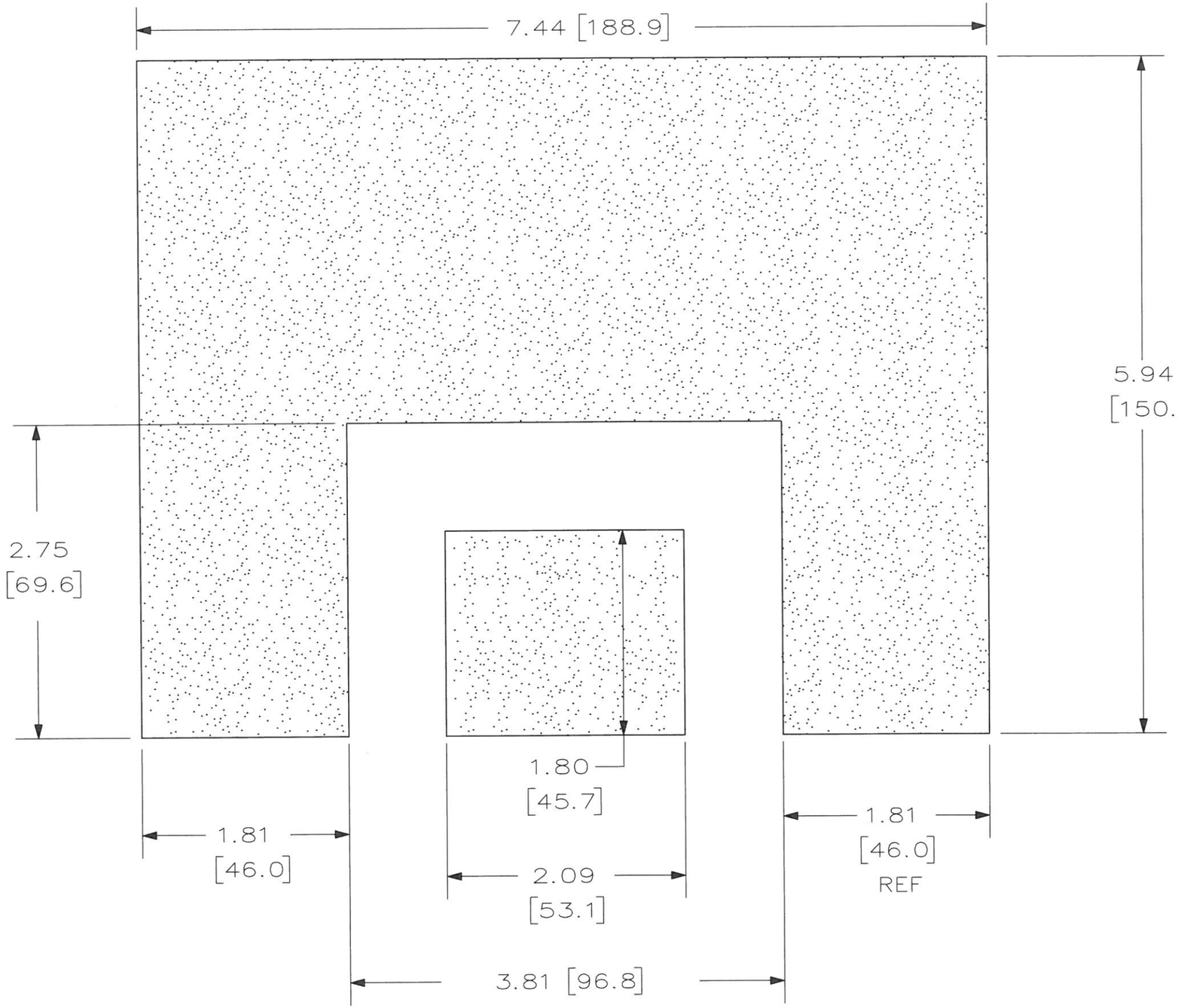

FLOOR COVERING TEMPLATE

ALL DIMENSIONS ARE IN INCHES AND [MILLIMETERS]

SHT 2 OF 2

CODE 74545

LIST OF PARTS

DESCRIPTION	MATERIAL	FINISH

SYM	REVISIONS	APP	DATE
5	SHT 1 SECTION A-A DIM .25 WAS .50 UPDATED TOP VIEW ADDED BEVELED EDGES PER DCN 23212. MYA	DDL	7/21/17
4	1.81 WAS 2.09 2 PLACES, 2.09 WAS 1.64. 3.81 WAS 3.26, 1.80 WAS 1.94 PER DCN 21050 TF	TF	2/17/15
3	NO CHANGES SEE SHEET 1 FOR CHANGES PER DCN 18892. MYA	DJP	5/30/12
2	NO CHANGES SEE SHEET 1 FOR CHANGES PER DCN 18851. MYA	DJP	5/16/12
1	RELEASED PER DCN16595	SRE	3/9/10

THE DESIGN AND DIMENSIONS OF PRODUCT SHOWN ON THIS DRAWING ARE SUBJECT TO CHANGE WITHOUT NOTICE

TITLE
FLOOR BOX COVER
CFB7 SERIES
1/4" BEVELED CARPET FLANGE

TOLERANCES UNLESS OTHERWISE SPECIFIED
.XX = ±.01
.XXX = ±.005
ANGLES = ±2°

WIRING DEVICE-KELLEMS
HUBBELL INCORPORATED
SHELTON, CT

DR. BY SRE	APP. BY
TR. BY	SCALE 1:1
CHK. BY	DATE 3/9/10

DIMENSION SHEET FOR CAT. NO. SEE SHEET 1

REPAIRABLE ☐ NON-REPAIRABLE ☒

B

M-11557

5