M-11601 | 3

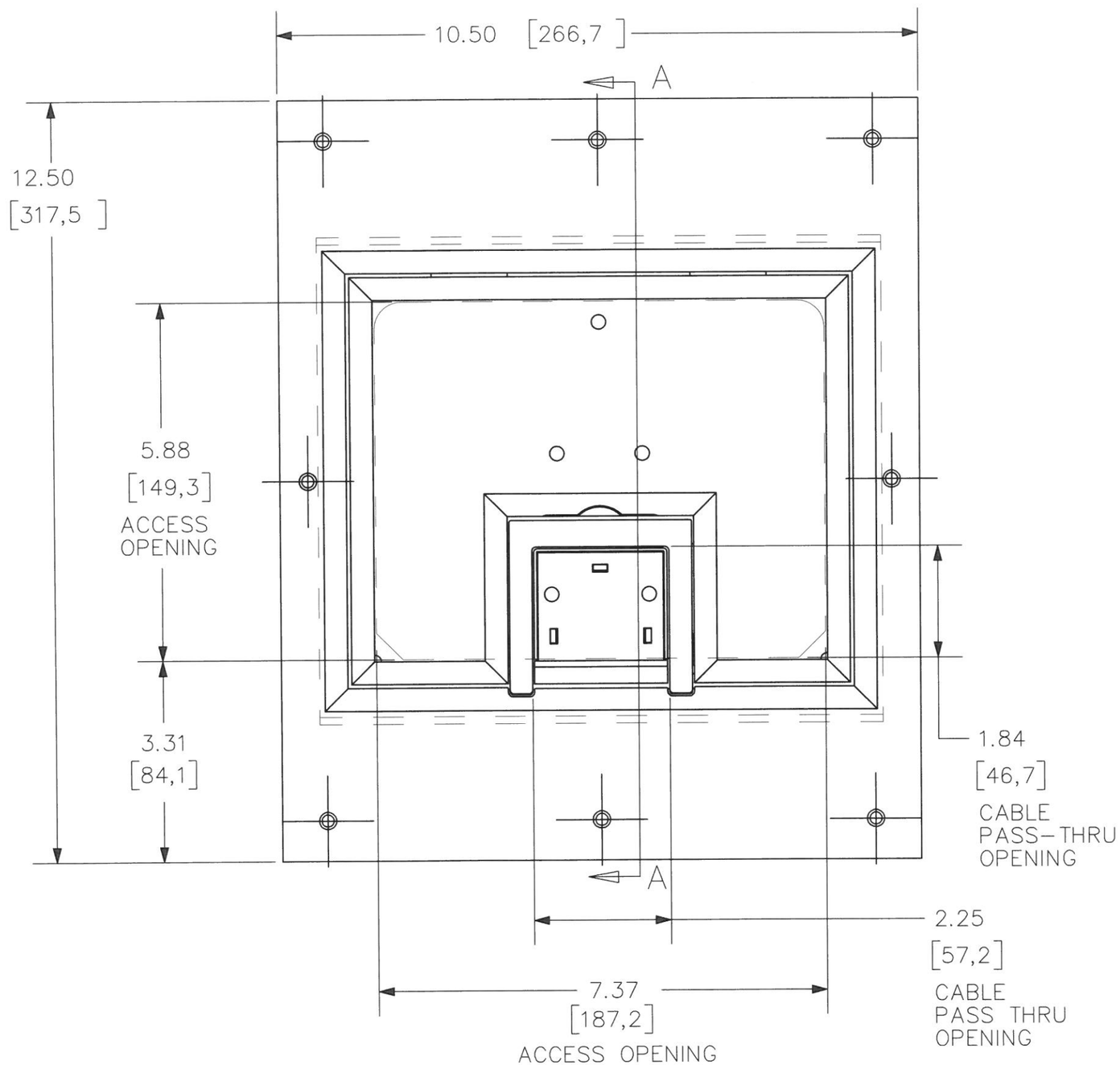

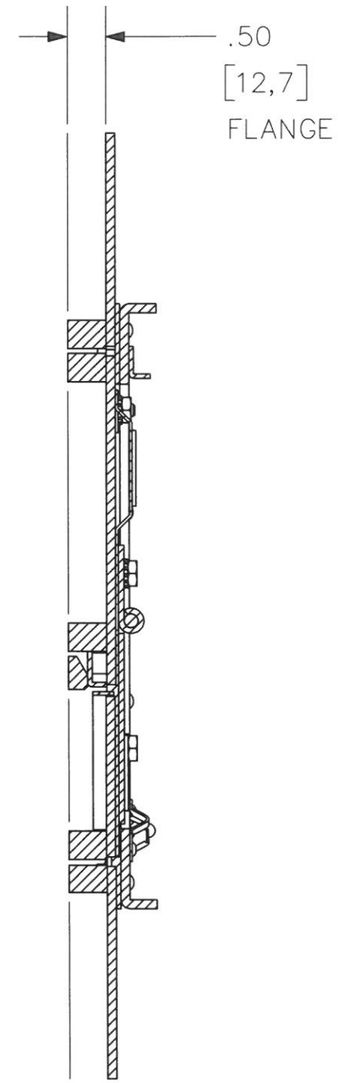

SECTION A-A

CATALOG NUMBER	FLANGE MATERIAL
CFB7TBRS	BRASS
CFB7TALU	ALUMINUM

CODE 74545

ALL DIMENSIONS ARE IN INCHES AND [MILLIMETERS]

SHT 1 OF 2

LIST OF PARTS

DESCRIPTION	MATERIAL	FINISH
COVER PLATE	STEEL	ZINC
ACCESS DOOR	STEEL	ZINC
CABLE DOOR	STEEL	ZINC
TRIM	SEE CHART	
FASTENERS	STEEL	ZINC

SYM	REVISIONS	APP	DATE
3	ON SHT 1 UPDATED TOP VIEW TO ELIMINATE 4 FASTERNERS NO CHANGES TO SHT 2 PER DCN 23212. MYA	DDL	7/24/17
2	1.84 WAS 2.29, 2.25 WAS 2.28, 3.31 WAS 3.22, 5.88 WAS 6.06, 7.37 WAS 7.30. PER DCN 21050 TF	TF	2/17/15
1	RELEASED PER DCN16595	SRE	3/9/10

THE DESIGN AND DIMENSIONS OF THE PRODUCT SHOWN ON THIS DRAWING ARE SUBJECT TO CHANGE WITHOUT NOTICE

TITLE
FLOOR BOX COVER & FLANGE
CFB7 SERIES, 1/2" EDGING

TOLERANCES UNLESS OTHERWISE SPECIFIED
FRACTIONS ±1/64
DECIMALS ±.005
ANGLES ±2°

WIRING DEVICE-KELLEMS
HUBBELL INCORPORATED
SHELTON, CT

DR. BY SRE	APP. BY SRE
TR. BY	SCALE 1:2
CHK'D BY SRE	DATE 3/9/10

DIMENSION SHEET FOR CAT. NO. SEE CHART

REPAIRABLE ☐ NON-REPAIRABLE ☒

B

M-11601

3

M-11601 | 3

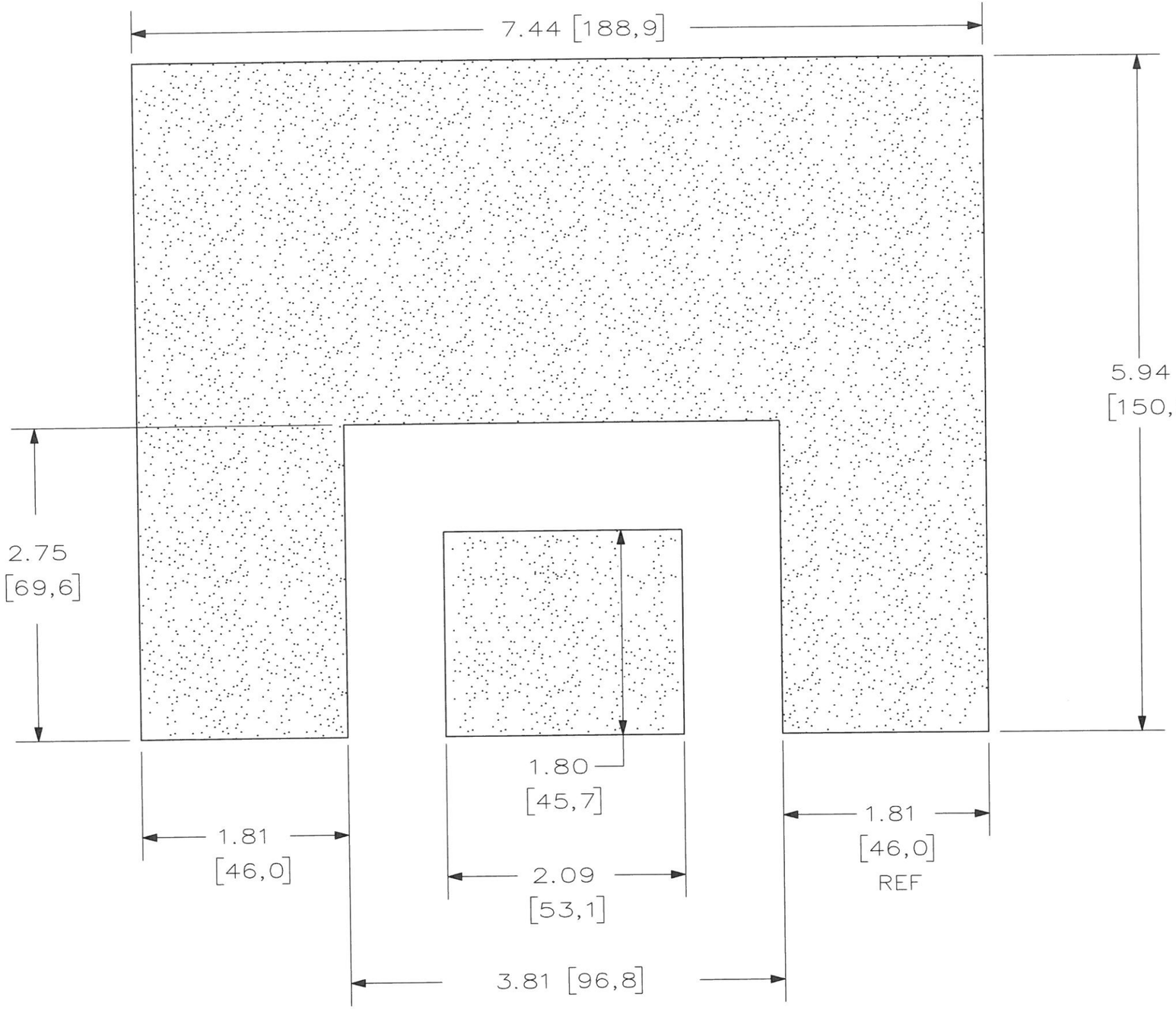

FLOOR COVERING TEMPLATE

ALL DIMENSIONS ARE IN INCHES AND [MILLIMETERS]

SHT 2 OF 2

CODE 74545

LIST OF PARTS

DESCRIPTION	MATERIAL	FINISH

SYM	REVISIONS	APP	DATE
3	ON SHT 1 UPDATED TOP VIEW TO ELIMINATE 4 FASTERNERS NO CHANGES TO SHT 2 PER DCN 23212. MYA	DDL	7/24/17
2	7.44 WAS 7.97,5.94 WAS 6.72 1.81 WAS 2.72, 3.81 WAS 2.53 2.09 WAS 1.97, 1.80 WAS 2.47 PER DCN 21050 TF	TF	2/17/15
1	RELEASED PER DCN16595	SRE	3/9/10

THE DESIGN AND DIMENSIONS OF THE PRODUCT SHOWN ON THIS DRAWING ARE SUBJECT TO CHANGE WITHOUT NOTICE

TITLE
FLOOR BOX COVER & FLANGE
CFB7 SERIES, 1/2" EDGING

TOLERANCES UNLESS OTHERWISE SPECIFIED
FRACTIONS ±1/64
DECIMALS ±.005
ANGLES ±2°

WIRING DEVICE-KELLEMS
HUBBELL INCORPORATED
SHELTON, CT

DR. BY SRE	APP. BY SRE
TR. BY	SCALE 1:2
CHK'D BY SRE	DATE 3/9/10

DIMENSION SHEET FOR CAT. NO. SEE SHEET 1

REPAIRABLE ☐ NON-REPAIRABLE ☒

B

M-11601

3