M-13404	1

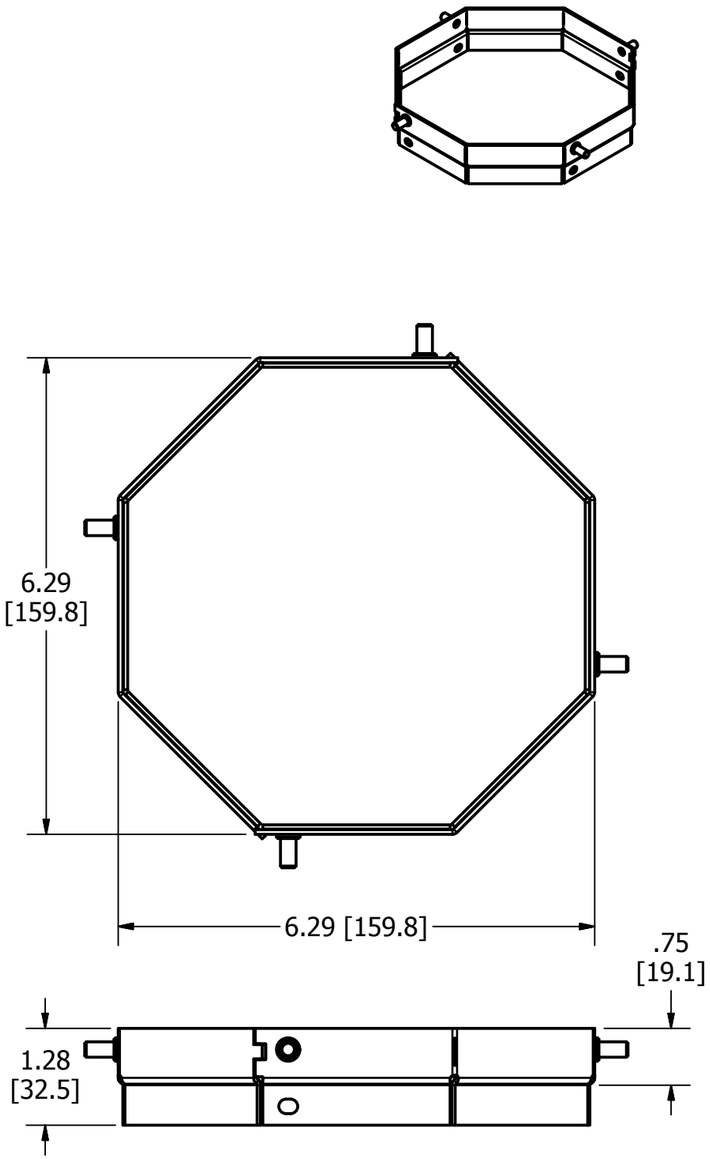

CFB6RCVRR075

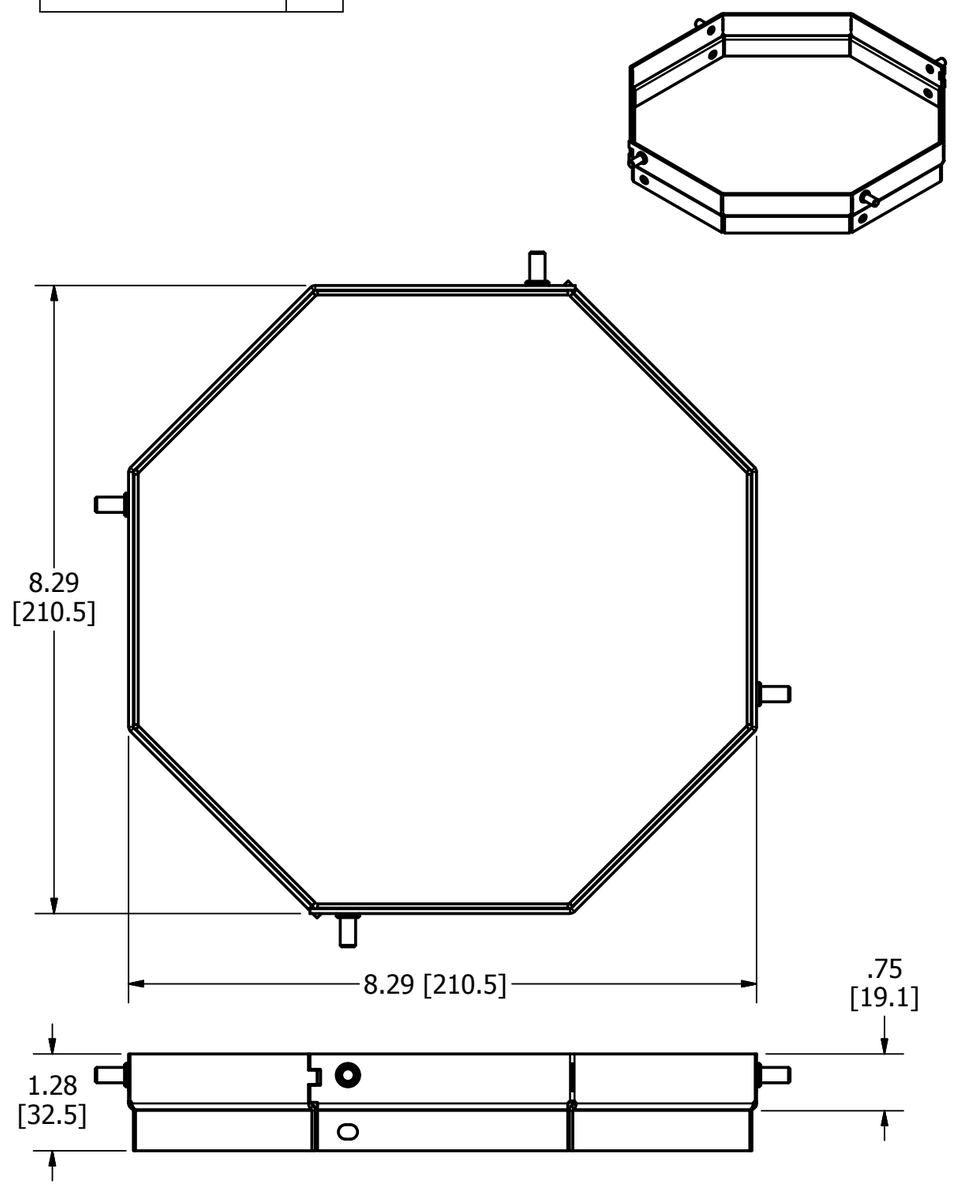

CFB8RCVRR075

LIST OF PARTS

DESCRIPTION	MATERIAL	FINISH
SPACERS	STEEL	PRE-GALVANIZED
FASTENERS	STEEL	ZINC

SYM	DESCRIPTION	APP	DATE
1	ORIGINAL RELEASE PER DCN 22262	SBW	7/8/2016

THE DESIGN AND DIMENSIONS OF THE PRODUCT SHOWN ON THIS DRAWING ARE SUBJECT TO CHANGE WITHOUT NOTICE

NOTES:
1. ALL DIMENSIONS ARE IN INCHES AND [MILLIMETERS].
2. PRODUCT IS cULus LISTED.
3. MOUNTING HARDWARE INCLUDED.
4. EACH SET OF SPACERS ADDS .75 INCHES [19.1 MM] OF CONCRETE OVER THE TOP OF THE FLOOR BOX.
5. EACH SET OF SPACERS ADDS .75 INCHES [19.1 MM] TO THE MINIMUM POUR DEPTH OF THE FLOOR BOX.

TITLE
STACKABLE SPACER RINGS FOR ROUND COVER CONCRETE FLOOR BOXES

TOLERANCES UNLESS OTHERWISE SPECIFIED
.XX = ± .01
.XXX = ± .005
ANGLES = ± 2°

WIRING DEVICE-KELLEMS
HUBBELL INCORPORATED
SHELTON, CT.

DR. BY	SBW	APP. BY	
TR. BY		SCALE	1:2
CHK'D BY		DATE	5/19/2016

CODE 74545

DIMENSION SHEET FOR CAT. NO. CFB6RCVRR075, CFB8RCVRR075

REPAIRABLE ☐ NON-REPAIRABLE ☒

B

M-13404

1