M-12711 | 1

NOTE: #10-32 X 7/16 LG. SCREWS PROVIDED

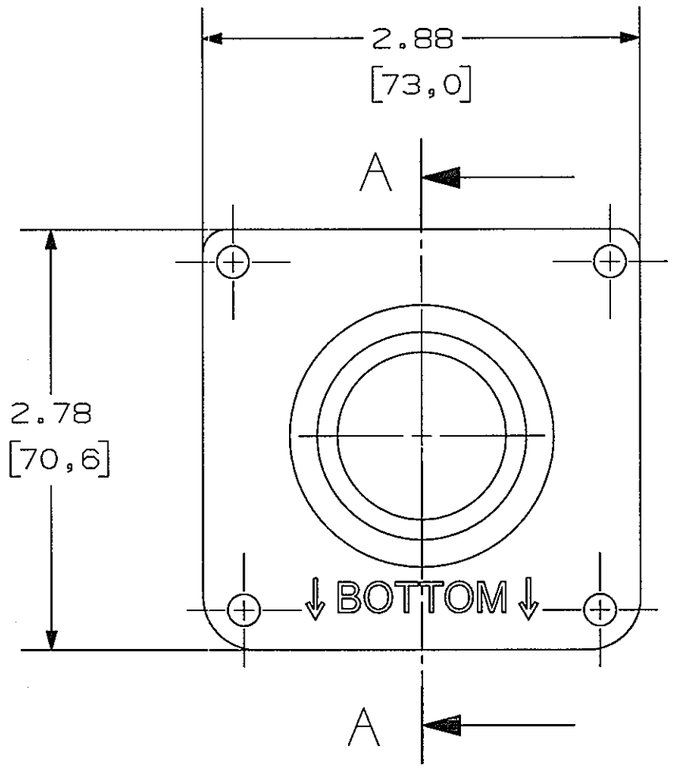

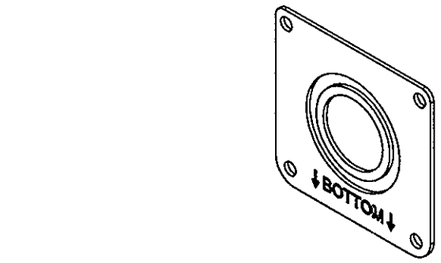

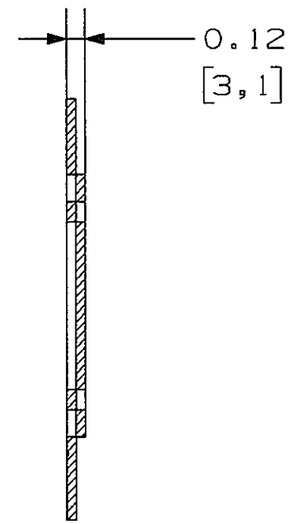

SECTION A-A

TRADE SIZE	KO SIZE
3/4	1.109
1	1.375
1-1/4	1.734

NOTES: UNLESS OTHERWISE SPECIFIED:

1. DIMENSIONS SHOWN ON THIS DRAWING ARE NOMINAL VALUES FOR GENERAL USE ONLY. ACTUAL PART TOLERANCES MUST BE OBTAINED FROM HUBBELL ENGINEERING.
2. PRODUCT IS cULus LISTED.
3. DIMENSIONS ARE IN INCHES [mm].

CAT. NO. CFBKOPLATE KO PLATE FOR USE WITH CFB2G30, CFB2G30R, CFB4G30, CFB4G30R, CFB6G30, CFB6G30R SERIES FLOOR BOXES.

CAT. NO. CFBKOPLATECR CORROSION RESISTANT KO PLATE FOR USE WITH CFB2G30CR, CFB2G30RCR, CFB4G30CR, CFB4G30RCR, CFB6G30CR, AND CFB6G30RCR CORROSION RESISTANT SERIES FLOOR BOXES.

LIST OF PARTS

DESCRIPTION	MATERIAL	FINISH
PLATE	STEEL	ZINC PL.
PLATE CR	STEEL	GREEN
SCREWS	STEEL	ZINC PL.

SYM	REVISIONS	APP	DATE
1	9/23/14 RELEASE FOR PRODUCTION PER DCN 20800 CAC TLS	CAC	

THE DESIGN AND DIMENSIONS OF THE PRODUCT SHOWN ON THIS DRAWING ARE SUBJECT TO CHANGE WITHOUT NOTICE

TITLE
KOPLATES METALLIC

TOLERANCES UNLESS OTHERWISE SPECIFIED
.XX = ±.01
.XXX = ±.005
ANGLES = ±2°

WIRING DEVICE-KELLEMS
HUBBELL INCORPORATED
SHELTON, CT

DR. BY CAC | APP. BY
TR. BY | SCALE 1:1
CHK. BY | DATE 09/23/14

DIMENSION SHEET FOR CAT. NO.
CFBKOPLATE, CFBKOPLATECR
REPAIRABLE ☒ NON-REPAIRABLE ☐

B

M-12711

1

CODE 74545