M-13901 | 1

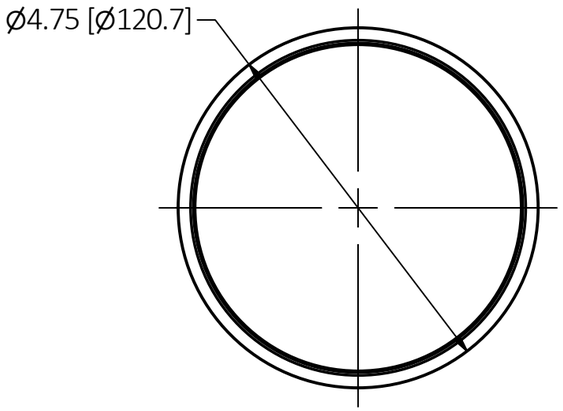

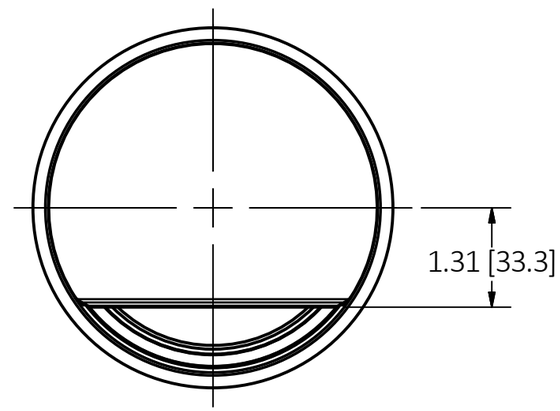

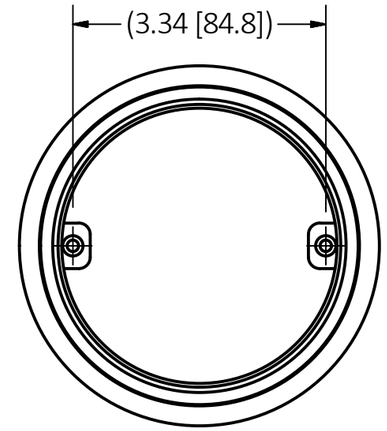

CFBS1R4T2CVRSS WITH
NO COVER INSTALLED

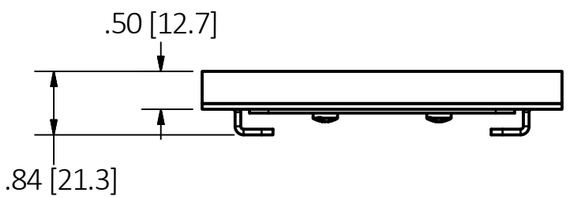

CFBS1R4T2CVRSS WITH
NOT-IN-USE COVER INSTALLED

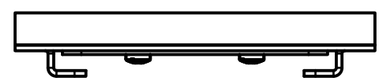

CFBS1R4T2CVRSS WITH
IN-USE COVER INSTALLED

CATALOG NUMBER	DESCRIPTION
CFBS1R4T2CVRSS	CFBS1R4 TILE FLANGE/COVER STAINLESS STEEL
CFBS1R4T2CVRSSREC	CFBS1R4 REPLACEMENT TILE COVER - INUSE
CFBS1R4T2CVRSSBNK	CFBS1R4 REPLACEMENT TILE COVER - NOT-IN-USE

GENERAL NOTES:

1. ALL DIMENSIONS ARE: IN [MM].
2. THIS PRODUCT IS INTENDED FOR USE WITH CFBS1R4xx SERIES FLOOR BOXES AND REQUIRES CFNS1R4CUP.
3. cULus LISTED.

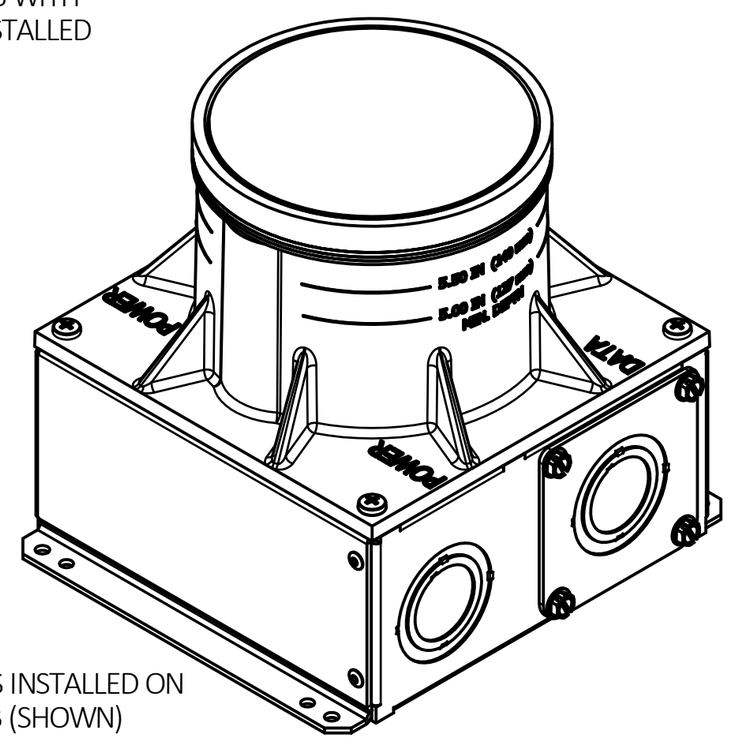

CFBS1R4T2CVRSS INSTALLED ON
CFBS1R4SFB (SHOWN)

LIST OF PARTS

DESCRIPTION	MATERIAL	FINISH
TILE FLANGE	STIANLESS STL.	
NOT-IN-USE CVR	STAINLESS STL.	
IN-USE CVR	STAINLESS STL.	
SCREWS	STEEL	ZINC PLATED
MOUNT. SCR.	STAINLESS STL.	
SPACER 1	FIBER	
SPACER 2	ELASTOMER	
O-RING	ELASTOMER	

DIMENSION SHEET FOR CAT. NO.
SEE TABLE

REV	DESCRIPTION	APP	DATE
1	RELEASED PER DCN#24020	EMD	4/30/18

THE DESIGN AND DIMENSIONS OF THE PRODUCT SHOWN ON THIS DRAWING ARE SUBJECT TO CHANGE WITHOUT NOTICE. DIMENSIONS ARE IN INCHES [mm].

TITLE

CUSTOMER DRAWING, S1R4 TILE FLANGE

WIRING DEVICE-KELLEMS
HUBBELL INCORPORATED
SHELTON, CT

TOLERANCES UNLESS OTHERWISE SPECIFIED
.XX = ± .01
.XXX= ± .005
ANGLE TOL. ±2°

DR. BY EMD
CHK. BY
SCALE 1 / 2
DATE 4/30/18

B
M-13901
1

CAGE CODE 74545