M-9877 | 1

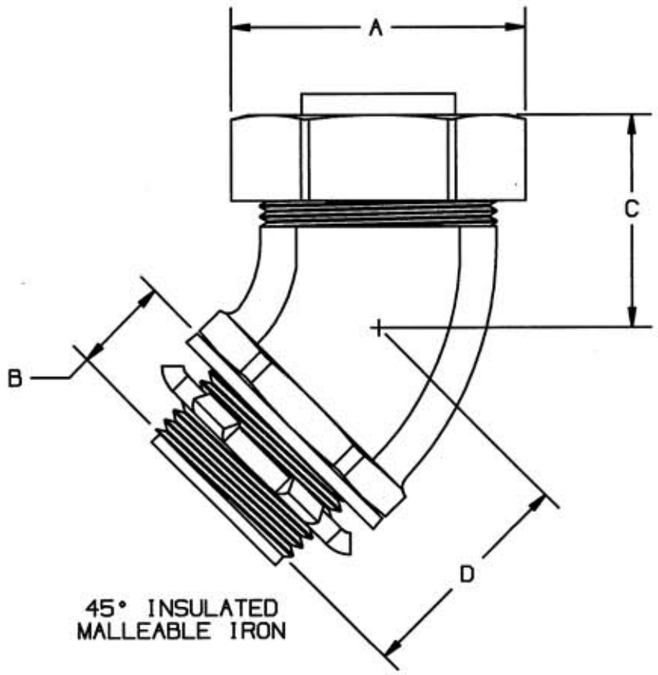

45° INSULATED
MALLEABLE IRON

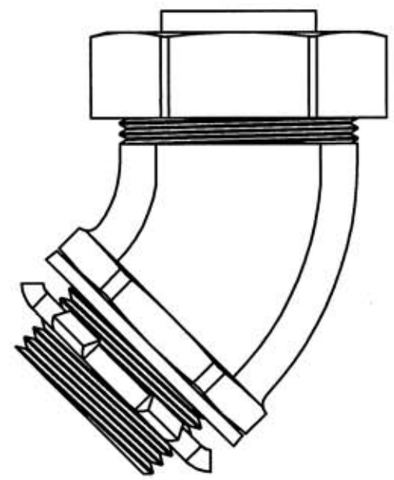

45° UNINSULATED
MALLEABLE IRON

INSULATED FITTING CAT. NO. *	UNINSULATED FITTING CAT. NO. *	CONDUIT SIZE	A INCHES ±.015 [mm ±0.4]	B INCHES ±.015 [mm ±0.4]	THREAD SIZE	C INCHES ±.015 [mm ±0.4]	D INCHES ±.015 [mm ±0.4]
H03841	H0384	3/8"	1.062 [26.988]	.594 [15.081]	1/2"-14 NPT	1.188 [30.163]	1.281 [32.544]
H05041	H0504	1/2"	1.188 [30.163]	.594 [15.081]	1/2"-14 NPT	1.188 [30.163]	1.281 [32.544]
H07541	H0754	3/4"	1.453 [36.909]	.594 [15.081]	3/4"-14 NPT	1.188 [30.163]	1.437 [36.513]
H10041	H1004	1"	1.719 [43.656]	.656 [16.669]	1"-11-1/2 NPT	1.375 [34.925]	1.531 [38.894]
H12541	H1254	1-1/4"	2.187 [55.563]	.625 [15.875]	1-1/4"-11-1/2 NPT	1.422 [36.116]	1.687 [42.863]
H15041	H1504	1-1/2"	2.500 [63.500]	.625 [15.875]	1-1/2"-11-1/2 NPT	1.656 [42.069]	2.000 [50.800]
H20041	H2004	2"	3.000 [76.200]	.656 [16.669]	2"-11-1/2 NPT	1.687 [42.863]	2.250 [57.150]

* FOR USE WITH FLEXIBLE METALLIC & NONMETALLIC LIQUID-TIGHT CONDUIT

A = NUT FLATS
B = THREAD LENGTH & THREAD SPEC.
C = THREAD TO BEND
D = NUT TO BEND

CODE 74545

LIST OF PARTS

DESCRIPTION	MATERIAL	FINISH
BODY	IRON	ZINC PLATE
COMPRESSION NUT:		
3/8"-1" T.S.	STEEL	ZINC PLATE
1-1/4"-4" T.S.	IRON	ZINC PLATE
FERRULE	STEEL	ZINC PLATE
SPLIT SEAL RING	NYLON	YELLOW
SEALING WASHER	NYLON	YELLOW
INSULATOR	NYLON	YELLOW
LOCKNUT	STEEL	ZINC PLATE

DIMENSION SHEET FOR CAT. NO.
SEE TABLE

REPAIRABLE ☐ NON-REPAIRABLE ☒

B

SYM	REVISIONS	APP	DATE
1	RELEASED PER DCN 12599 RCM	CJC	10/18/05

THE DESIGN AND DIMENSIONS OF THE PRODUCT SHOWN ON THIS DRAWING ARE SUBJECT TO CHANGE WITHOUT NOTICE

TITLE
45° FLEXIBLE METALLIC CONDUIT FITTINGS

TOLERANCES UNLESS OTHERWISE SPECIFIED
FRACTIONS ± 1/64
DECIMALS ± .005
ANGLES ± 2°

WIRING DEVICE-KELLEMS
HUBBELL INCORPORATED
BRIDGEPORT, CT

DR. BY RCM | APP. BY CJC
TR. BY | SCALE NONE
CHK'D BY CJC | DATE 10/18/05

M-9877

1