M-9739 | 4

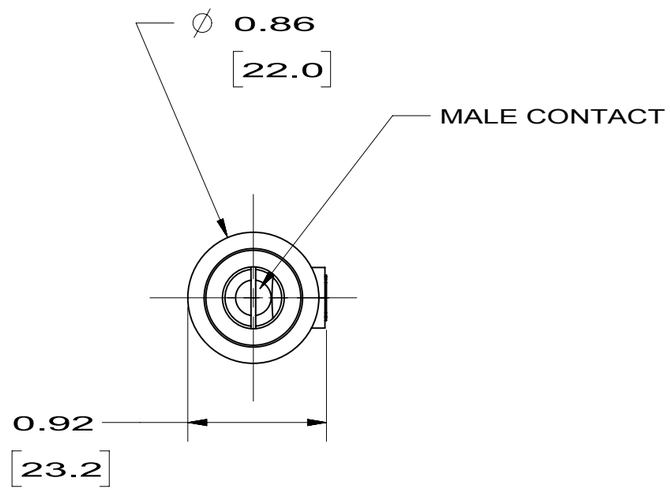

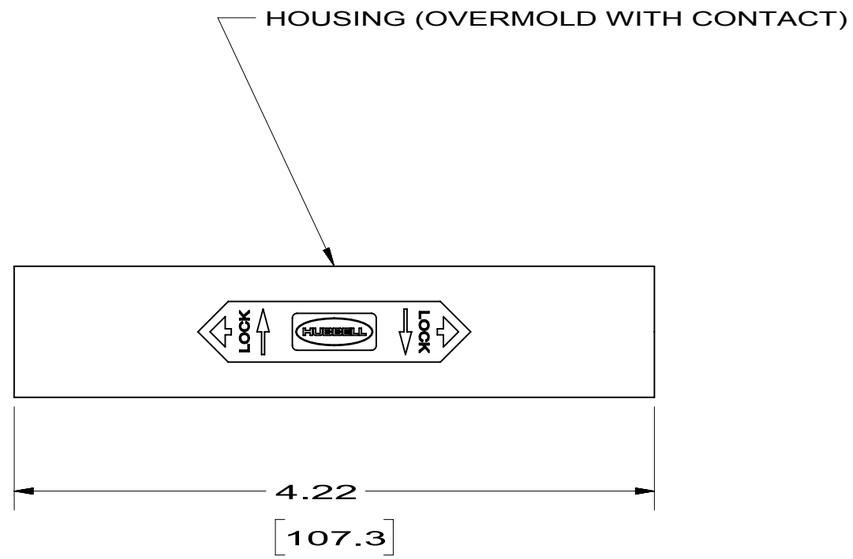

HUBBELL CAT. NO.	COLOR
HBL15DMGN	GREEN
HBL15DMW	WHITE

NOTES:
1. DIMENSIONS ARE INCHES ± .02
   [mm] ± .5
2. RATING: 600V 150 AMP
3. UL/c-UL ENCLOSURE TYPES 3R, 4X, 12.

CODE 74545

LIST OF PARTS

DESCRIPTION	MATERIAL	FINISH
HOUSING	TPE	SEE TABLE
MALE CONTACT	BRASS	

SYM	REVISIONS	APP	DATE
4	REVISED NOTE 2 FROM 600VAC/250VDC TO 600V PER DCN 23410 RGP	RGP	11/01/17
3	CHANGE CATALOG NO.'S FROM HBLDMXX15 TO HBL15DMXXX PER DCN 19979 CAC	CC	7/23/13
2	REMOVE (5) COLORS PER DCN 19061 CAC	CC	8/28/12
1	RELEASE FOR PRODUCTION PER DCN#12733 PJT	TB	1/10/06

THE DESIGN AND DIMENSIONS OF THE PRODUCT SHOWN ON THIS DRAWING ARE SUBJECT TO CHANGE WITHOUT NOTICE

TITLE 150A SINGLE POLE DOUBLE MALE

TOLERANCES UNLESS OTHERWISE SPECIFIED

FRACTIONS	± 1/64
DECIMALS	± .005
ANGLES	± 2°

WIRING DEVICE-KELLEMS
HUBBELL INCORPORATED
BRIDGEPORT, CT

DR. BY	PJT	APP. BY	TB
TR. BY		SCALE	1:1
CHK'D BY		DATE	1/10/08

DIMENSION SHEET FOR CAT. NO. SEE TABLE

REPAIRABLE ☐ NON-REPAIRABLE ☒

B

M-9739

4