M-9731 | 6

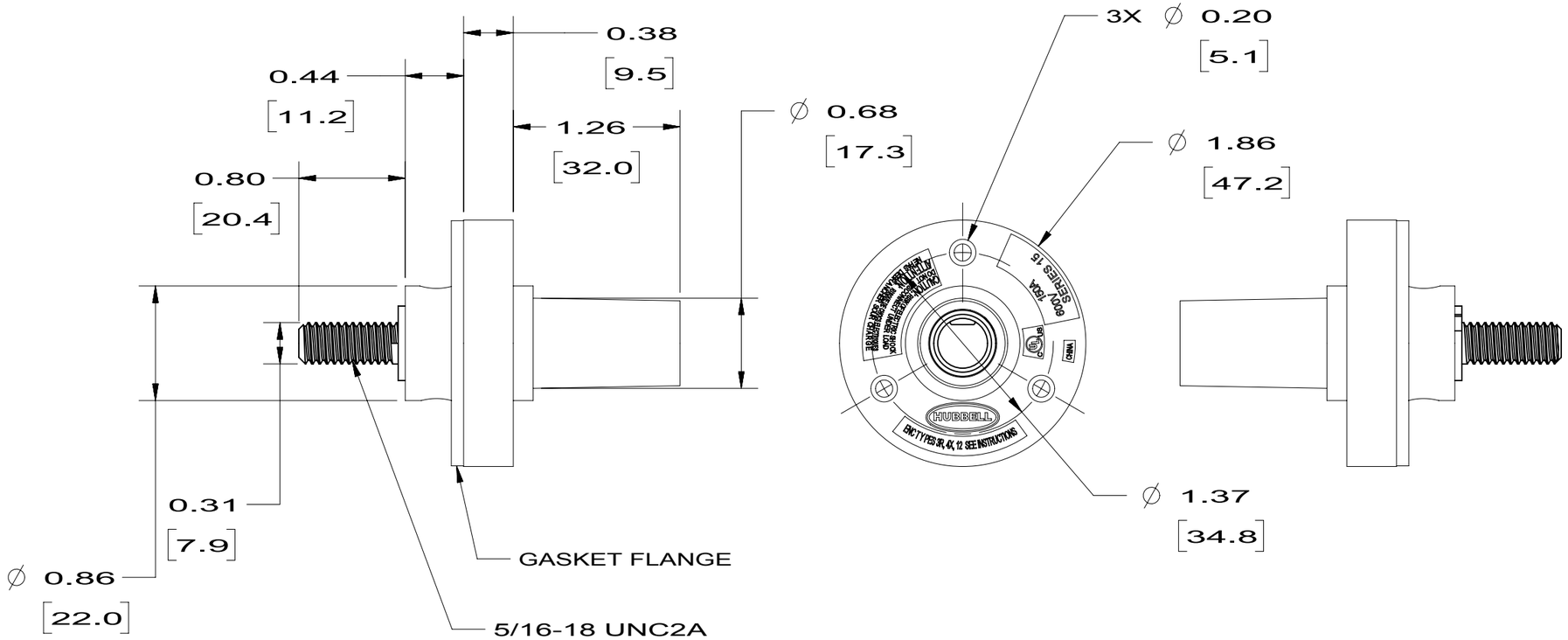

NOTES:

1. DIMENSIONS ARE INCHES ± .02
   [mm] ± .5
2. RATING: 600V 150 AMP.
3. UL/c-UL ENCLOSURE TYPES 3R, 4X, 12,

HUBBELL CAT. NO.	COLOR
HBL15FRSBK	BLACK
HBL15FRSW	WHITE
HBL15FRSGN	GREEN
HBL15FRSR	RED
HBL15FRSBL	BLUE
HBL15FRSBN	BROWN
HBL15FRSO	ORANGE
HBL15FRSY	YELLOW

LIST OF PARTS

DESCRIPTION	MATERIAL	FINISH
HOUSING	PBT	SEE TABLE
RIVET	BRASS	
CONTACT FEMALE	BRASS	
CROSS PIN	PBT	BLACK
GASKET FLANGE	NEOPRENE	

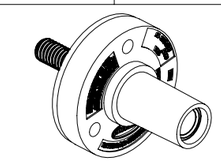

CATALOG NO: HBL15FRSBK
(NOT SHOWN TO SCALE)

SYM	REVISIONS	APP	DATE
6	REVISED NOTE 2 FROM 600VAC/250VDC TO 600V PER DCN 23410 RGP	RGP	11/01/17
5	IN TABLE, ADDED CATALOG NUMBERS; HBL15FRSBN, HBL15FRSO AND HBL15FRSY AND SPECS. PER DCN 21990 DDL	DJP	03/23/16
4	REDRAWN WITH EMBEDDED CAD MODEL WITH NO CHANGES TO PART GEOMETRY. PER DCN 21895 SPN	DJP	02/05/16
3	ADDED GASKET FLANGE TO VIEWS AND CALLOUT. ADDED GASKET FLANGE AND MATERIAL SPEC TO LIST OF PARTS TABLE PER DCN 19721 DDL	CAC	03/27/13
2	REDESIGNED PER DCN 19117 CAC	CAC	09/30/12
1	RELEASE PER DCN 12733 PJT	TB	12/19/05

THE DESIGN AND DIMENSIONS OF THE PRODUCT SHOWN ON THIS DRAWING ARE SUBJECT TO CHANGE WITHOUT NOTICE

TITLE
SINGLE POLE FEMALE RECEPTACLE W/STUD

TOLERANCES UNLESS OTHERWISE SPECIFIED
.XX = ± .01
.XXX = ± .005
ANGLES = ± 2°

WIRING DEVICE-KELLEMS
HUBBELL INCORPORATED
SHELTON, CT

DR. BY	PJT	APP. BY	
TR. BY		SCALE	1:1
CHK. BY		DATE	12/19/05

DIMENSION SHEET FOR CAT. NO.
SEE TABLE

REPAIRABLE ☐
NON-REPAIRABLE ☒

B

M-9731

6

CODE 74545