M-10564 | 1

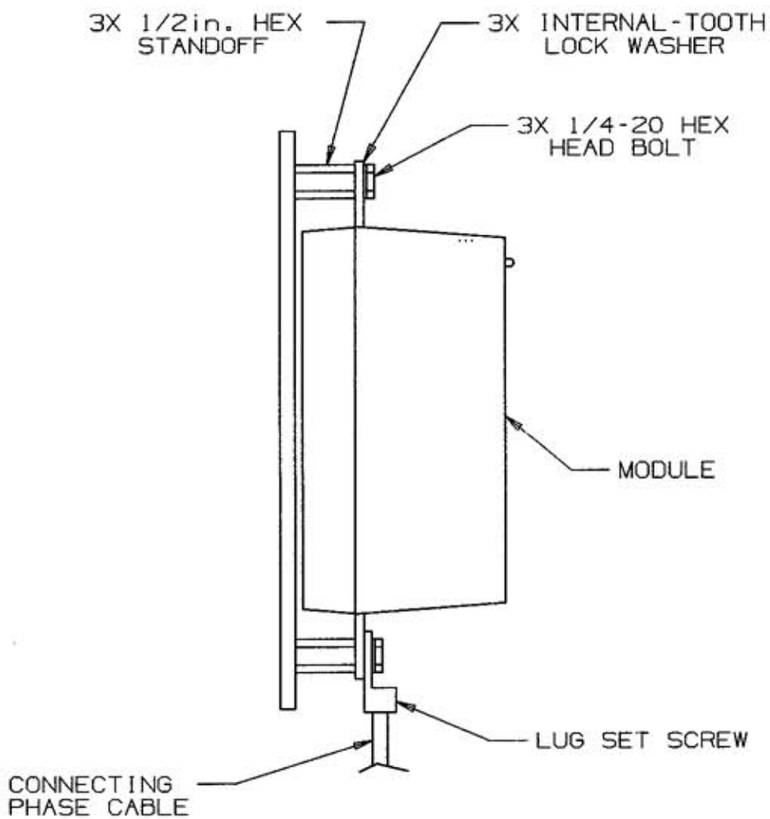

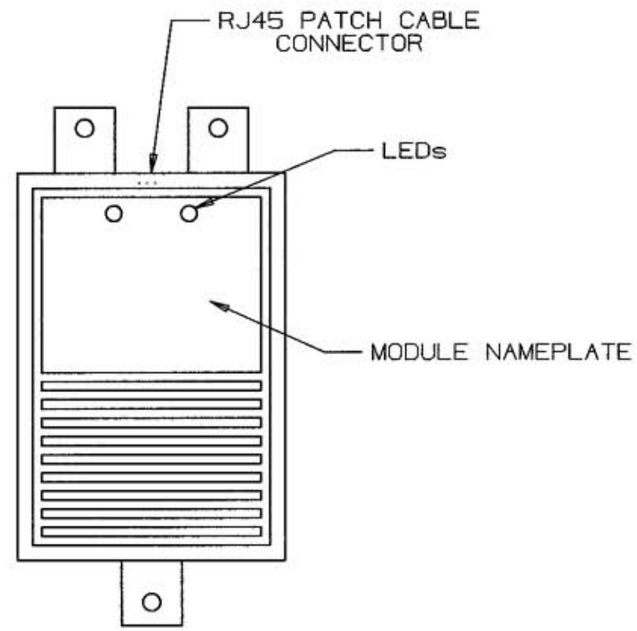

CAT. NO.	VOLTAGE
HBL160M120A	120V
HBL160M220A	220V
HBL160M240A	240V
HBL160M277A	277V
HBL160M480A	480V
HBL160M600A	600V

NOTES: (UNLESS OTHERWISE SPECIFIED)
1) .XX TOLERANCES TO BE ±.03
2) FOR REPLACEMENT ONLY.

DIMENSIONS ARE IN INCHES [MM]

CODE 74545

LIST OF PARTS

DESCRIPTION	MATERIAL	FINISH

SYM	REVISIONS	APP	DATE
1	INITIAL RELEASE PER DCN 13952 AMM	SML	5-15-07

THE DESIGN AND DIMENSIONS OF THE PRODUCT SHOWN ON THIS DRAWING ARE SUBJECT TO CHANGE WITHOUT NOTICE

TITLE
SPD MODULE
160kA

TOLERANCES UNLESS OTHERWISE SPECIFIED
FRACTIONS ±1/64
DECIMALS ±.005
ANGLES ±2°

WIRING DEVICE-KELLEMS
HUBBELL INCORPORATED
BRIDGEPORT, CT

DR. BY AMM | APP. BY SML
TR. BY | SCALE 1:1
CHK'D BY SML | DATE 5-15-07

DIMENSION SHEET FOR CAT. NO. SEE TABLE

REPAIRABLE ☐ NON-REPAIRABLE ☒

B M-10564 1