M-13633 | 1

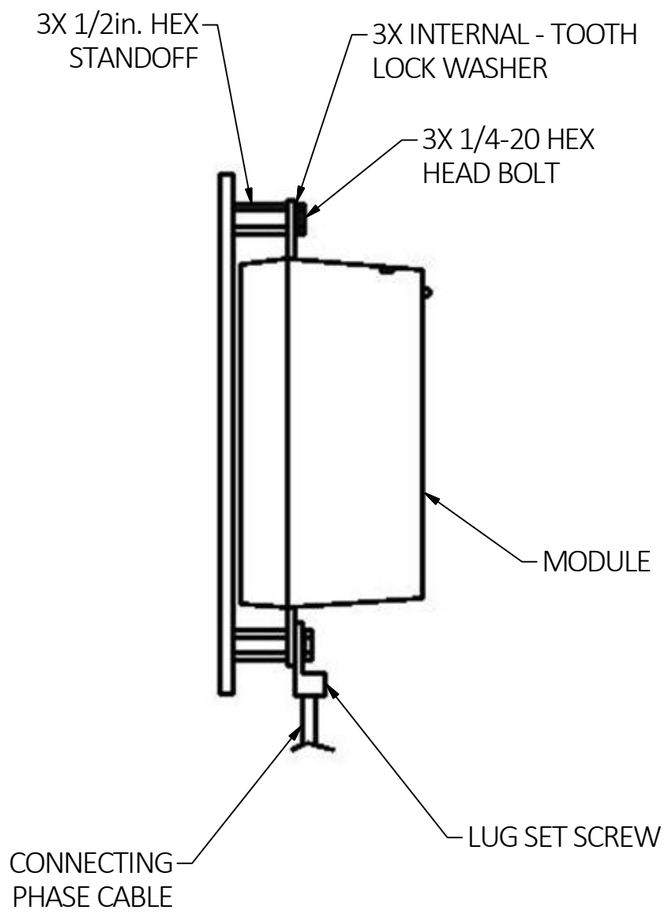

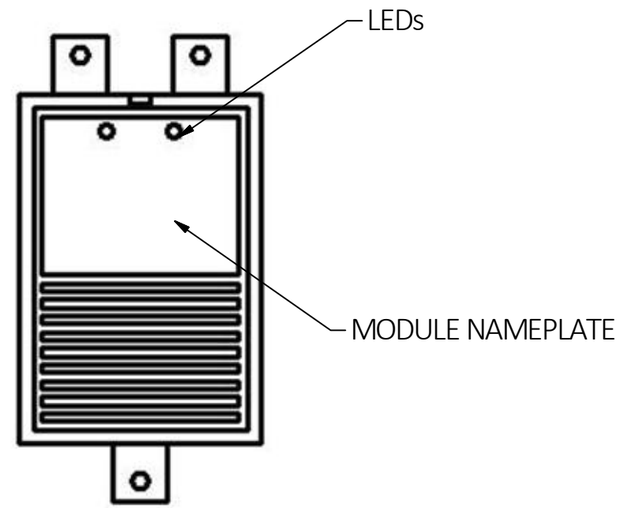

CATALOG NO.	VOLTAGE
HBL160M120BB	120/208V
HBL160M240B	240V
HBL160M240BHL	240V
HBL160M480B	480V
HBL160M480DB	480V
HBL160M347B	347V
HBL160M600B	600V

NOTES: (UNLESS OTHERWISE SPECIFIED)
1. DIMENSIONS ARE INCHES (mm)
2. .XX TOLERANCES TO BE ±.03
3. FOR REPLACEMENT ONLY.

CAGE CODE 74545

LIST OF PARTS

DESCRIPTION	MATERIAL	FINISH

DIMENSION SHEET FOR CAT. NO.
SEE TABLE

REV	DESCRIPTION	APP	DATE
1	NEW RELEASE PER DCN 23003. MYA	SL	5/18/17

THE DESIGN AND DIMENSIONS OF THE PRODUCT SHOWN ON THIS DRAWING ARE SUBJECT TO CHANGE WITHOUT NOTICE. DIMENSIONS ARE IN INCHES [mm].

TITLE

SURGE PROTECTIVE DEVICE REPLACEMENT MODULE 160kA

WIRING DEVICE-KELLEMS
HUBBELL INCORPORATED
SHELTON, CT

TOLERANCES UNLESS OTHERWISE SPECIFIED
.XX = ± .01
.XXX= ± .005
ANGLE TOL. ±2°

DR. BY	MALLEN	SCALE	NONE
CHK. BY	SL	DATE	5/18/17

B

M-13633

1