M-13604	1

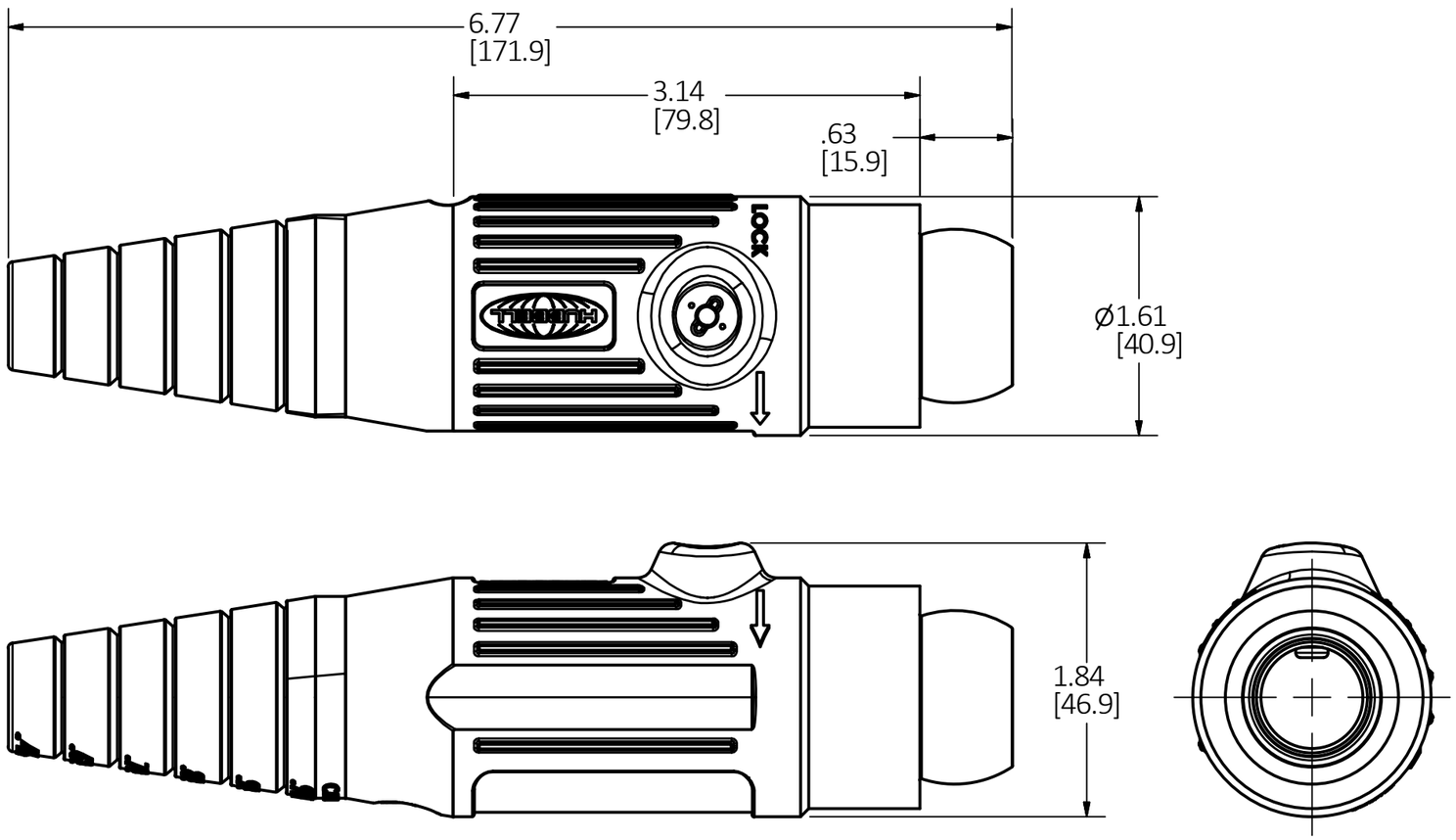

NOTES:

1. DIMENSIONS ARE IN INCHES ±.02 [mm] ±.5
2. RATING: 600VAC/250VDC 300AMP.
3. ENCLOSURE RATING: UL TYPE 4X, WHILE IN USE.
4. CABLE DIAMETER RANGE: ø 0 .460in. [11.7mm] - ø 0.885in.[22.5mm].
5. CABLE SIZE #2 AWG - 2/0, COPPER ONLY.
6. STRAIN RELIEF WIRE & COPPER FOIL NOT SHOWN.

HUBBELL CAT. NO.	COLOR
HBL18300FBK	BLACK
HBL18300FW	WHITE
HBL18300FGN	GREEN
HBL18300FR	RED
HBL18300FBL	BLUE
HBL18300FO	ORANGE
HBL18300FBN	BROWN
HBL18300FY	YELLOW

LIST OF PARTS

DESCRIPTION	MATERIAL	FINISH
BODY	TPE	
CONTACT	BRASS	
SET SCREWS (4)	STEEL	
STRAIN RELIEF WIRE	COPPER	
COPPER FOIL	COPPER	

DIMENSION SHEET FOR CAT. NO.
SEE TABLE

REV	DESCRIPTION	APP	DATE
1	4/6/17 NEW RELEASE PER DCN 23026 CAC		

THE DESIGN AND DIMENSIONS OF THE PRODUCT SHOWN ON THIS DRAWING ARE SUBJECT TO CHANGE WITHOUT NOTICE. DIMENSIONS ARE IN INCHES [mm].

TITLE

SINGLE POLE SERIES 18 FEMALE 300A

WIRING DEVICE-KELLEMS
HUBBELL INCORPORATED
SHELTON, CT

TOLERANCES UNLESS OTHERWISE SPECIFIED
.XX = ± .01
.XXX= ± .005
ANGLE TOL. ±2°

DR. BY	CAC	SCALE	1 : 1
CHK. BY		DATE	03/29/2017

B

M-13604

1

CAGE CODE 74545