M-10382 | 1

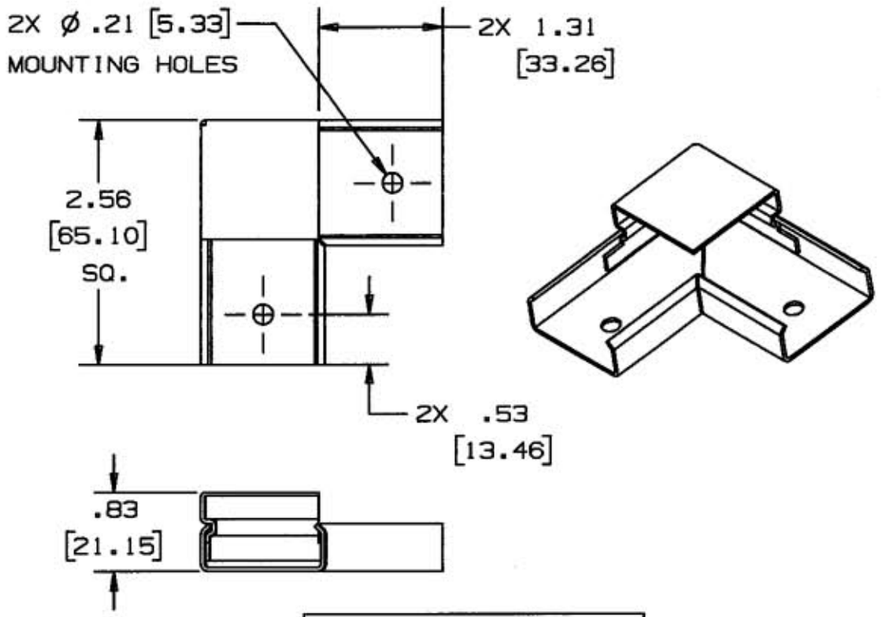

90° FLAT ELBOW	
CAT. NO.	COLOR
HBL2011IV	IVORY
HBL2011GY	GRAY

PROVIDED WITH (2) COUPLINGS
CAT. NO. HBL2001C

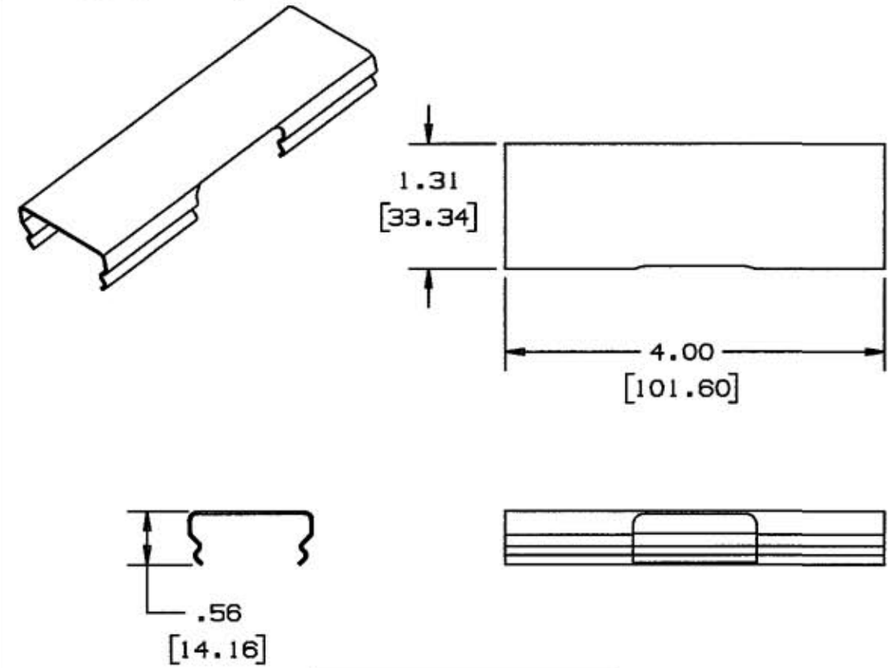

COVER-TEE	
CAT. NO.	COLOR
HBL2015IV	IVORY
HBL2015GY	GRAY

TEE BASE ASSY.	
CAT. NO.	COLOR
HBL2015IV	IVORY
HBL2015GY	GRAY

PROVIDED WITH (3) COUPLINGS
CAT. NO. HBL2001C AND INSULATOR
(NOT SHOWN)

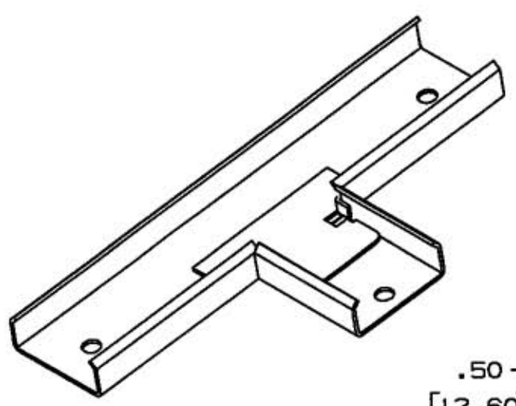

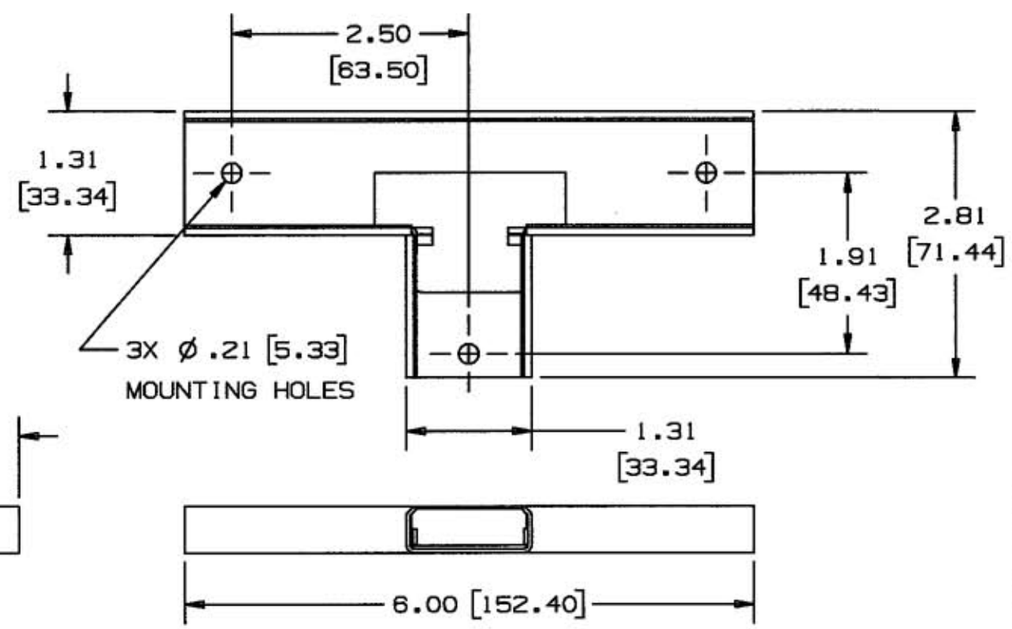

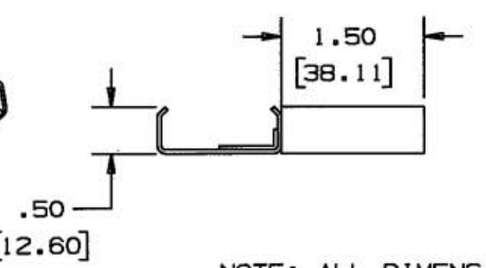

NOTE: ALL DIMENSIONS IN INCHES AND [MM]

CODE 74545

LIST OF PARTS

DESCRIPTION	MATERIAL	FINISH
90° FLAT ELBOW, COVER	STEEL	PAINTED
COVER, TEE	STEEL	PAINTED
TEE BASE ASSY.	STEEL	PAINTED

SYM	REVISIONS	APP	DATE
1	RELEASED PER DCN13549		11/14/06

THE DESIGN AND DIMENSIONS OF THE PRODUCT SHOWN ON THIS DRAWING ARE SUBJECT TO CHANGE WITHOUT NOTICE

TITLE
FLAT ELBOW, TEE BASE & COVER
HBL2000 SERIES

TOLERANCES UNLESS OTHERWISE SPECIFIED
FRACTIONS ± 1/64
DECIMALS ± .005
ANGLES ± 2°

WIRING DEVICE-KELLEMS
HUBBELL INCORPORATED
BRIDGEPORT, CT

DR. BY SRE	APP. BY
TR. BY	SCALE 1:1
CHK'D BY	DATE 11/14/06

DIMENSION SHEET FOR CAT. NO. SEE TABLE

REPAIRABLE ☐ NON-REPAIRABLE ☒

B

M-10382

1