M-10335 2

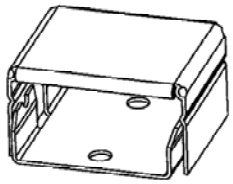

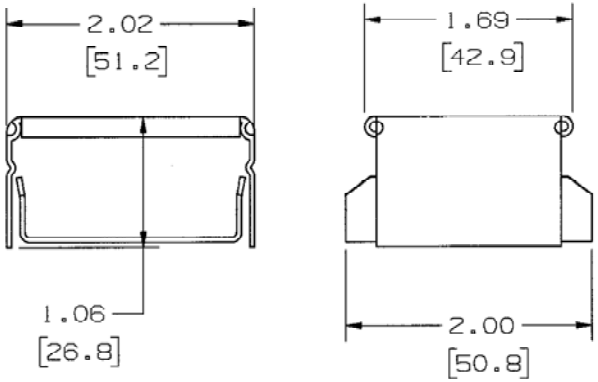

NOTE:
FOR USE WITH WIREMOLD® V2400 RACEWAY

TRANSITION FITTING	
CAT. NO.	COLOR
HBL2400TFIV	IVORY

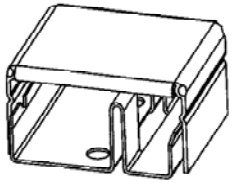

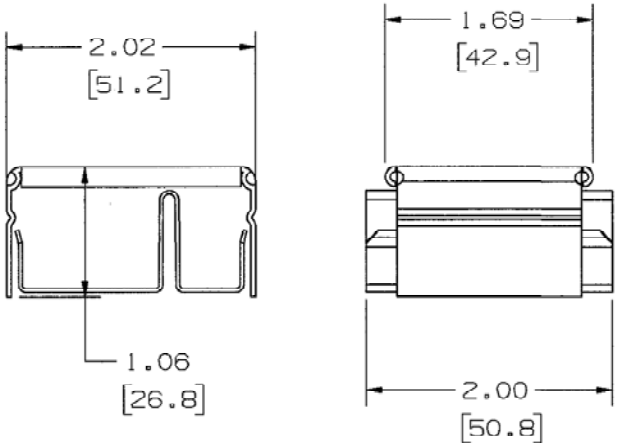

NOTE:
FOR USE WITH WIREMOLD® V2400BD RACEWAY

TRANSITION FITTING	
CAT. NO.	COLOR
HBL2400DTFIV	IVORY

NOTE: ALL DIMENSIONS IN INCHES AND [MM]

CODE 74545

LIST OF PARTS

DESCRIPTION	MATERIAL	FINISH
COVER, TRANS. FITTING	STEEL	PAINTED
BASE, TRANS. FITTING	STEEL	GALVANIZED

SYM	REVISIONS	APP	DATE
2	V2400BD WAS V2400D; REMOVED 24 SERIES PLUGMOLD CALLOUT FROM NOTE PER DCN 15095 RCM	SRE SM	8/15/08
1	RELEASED PER DCN 13354	SRE	3/6/07

THE DESIGN AND DIMENSIONS OF THE PRODUCT SHOWN ON THIS DRAWING ARE SUBJECT TO CHANGE WITHOUT NOTICE

TITLE
TRANSITION FITTING
HBL2400/HBL2400D
METAL RACEWAYS

TOLERANCES UNLESS OTHERWISE SPECIFIED
FRACTIONS ±1/64
DECIMALS ±.005
ANGLES ±2°

WIRING DEVICE-KELLEMS
HUBBELL INCORPORATED
BRIDGEPORT, CT

DR. BY SRE | APP. BY SRE
TR. BY | SCALE 1:1
CHK'D BY SRE | DATE 3/6/07

DIMENSION SHEET FOR CAT. NO. SEE TABLE

REPAIRABLE ☐ NON-REPAIRABLE ☒

B

M-10335

2