M - 10334 | 2

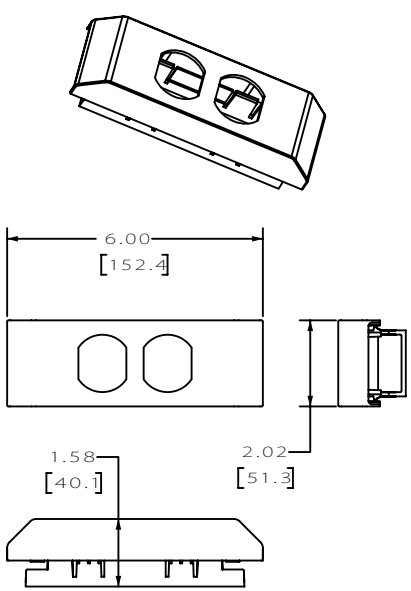

RECEPTACLE BRACKET & ADAPTER
CATALOG NUMBER HBL24106DRK

FOR USE WITH HUBBELL
DUPLEX 106 FRAMES,
FRAME ORDERED SEPERATELY

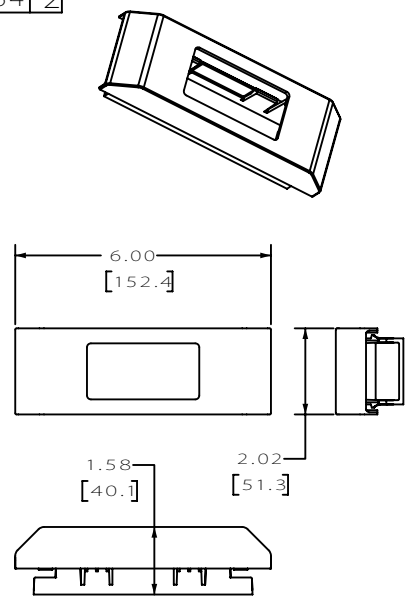

RECEPTACLE BRACKET & ADAPTER
CATALOG NUMBER HBL24106RRK

FOR USE WITH HUBBELL
RECTANGULAR 106 FRAMES,
FRAME ORDERED SEPERATELY

LIST OF PARTS

DESCRIPTION	MATERIAL	FINISH
BEZEL	PVC	IVORY
ADAPTER	PVC	IVORY

DIMENSION SHEET FOR CAT. NO. SEE DRAWING

REPAIRABLE ☐ NON-REPAIRABLE ☒

SYM	REVISIONS	APP	DATE
2	UPDATED IMAGES PER LATEST DESIGNS DCN14964	SRE SM	6/19/08
1	RELEASED PER DCN13354	SRE	3/6/07

THE DESIGN AND DIMENSIONS OF THE PRODUCT SHOWN ON THIS DRAWING ARE SUBJECT TO CHANGE WITHOUT NOTICE

TITLE
106 FRAME BRACKET
HBL2400 RACEWAY

TOLERANCES UNLESS OTHERWISE SPECIFIED
FRACTIONS ±1/64
DECIMALS ±.005
ANGLES ±2°

WIRING DEVICE - KELLEMS
HUBBELL INCORPORATED
BRIDGEPORT, CT

DR. BY SRE | APP. BY SRE
TR. BY | SCALE 1:1
CHK'D BY SRE | DATE 3/6/07

B | M - 10334 | 2

CODE 74545