M-10336 | 1

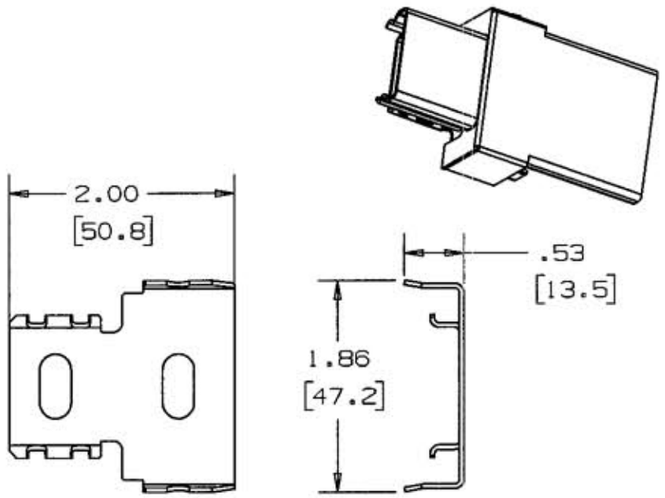

REDUCER BASE

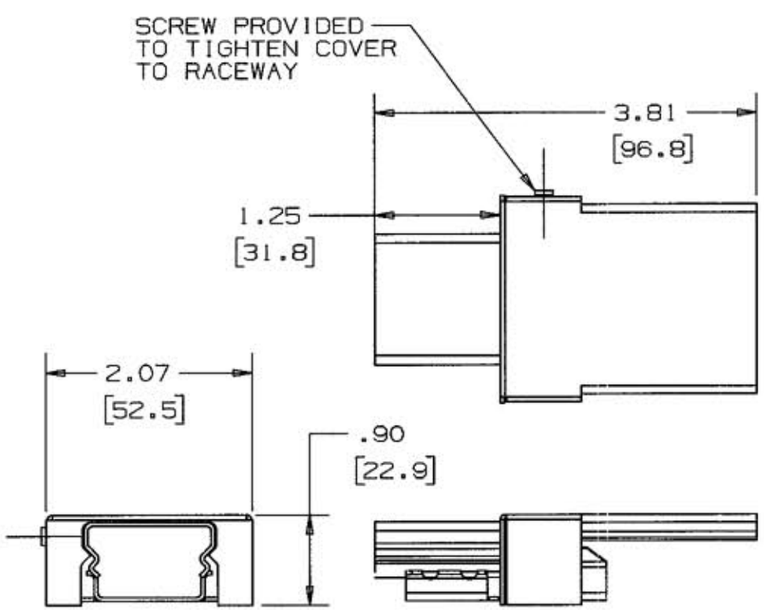

REDUCER COVER

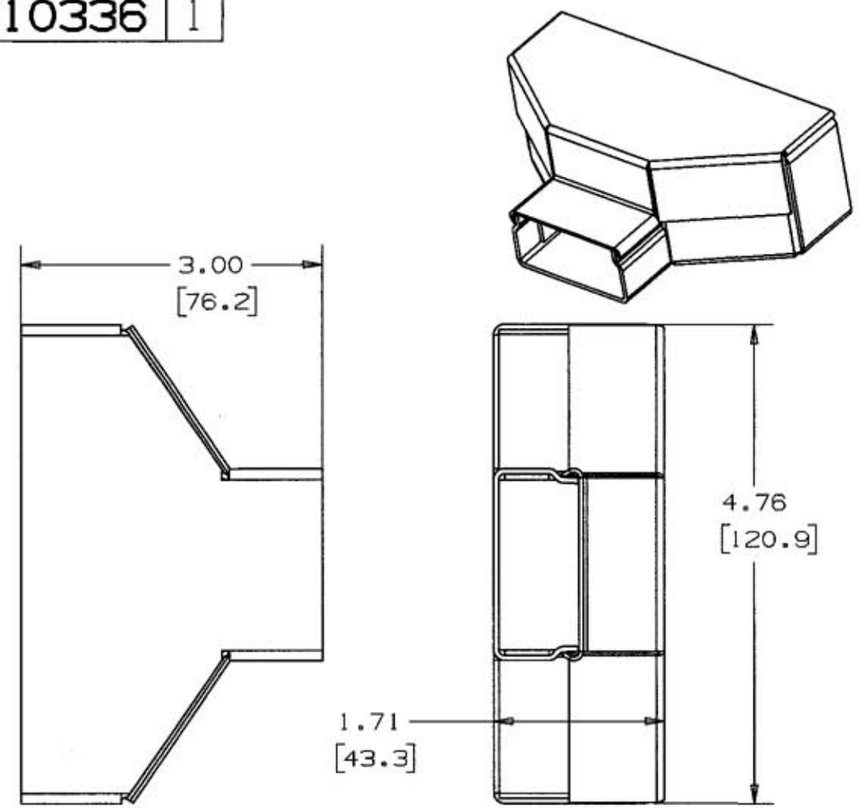

REDUCER BASE & COVER

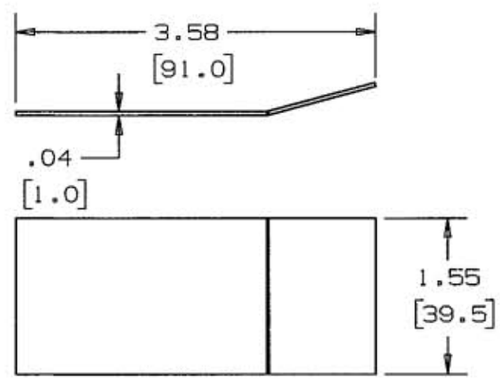

REDUCER BARRIER, FOR HBL4750 WHEN DIVIDED

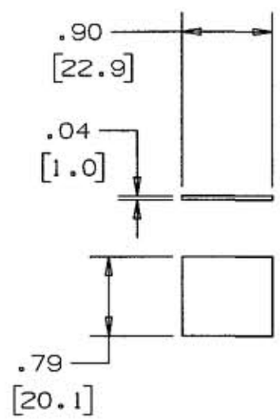

REDUCER BARRIER, FOR HBL2400D

REDUCER - HBL2400/HBL2000	COLOR
CAT. NO. HBL2420REDIV	IVORY

SUPPLIED WITH DIVIDED COUPLING CAT. NO. HBL2401DC

REDUCER - HBL4750/HBL2400	
CAT. NO.	COLOR
HBL4724REDIV	IVORY

NOTE: ALL DIMENSIONS IN INCHES AND [MM]

CODE 74545

LIST OF PARTS

DESCRIPTION	MATERIAL	FINISH
REDUCER COVERS	STEEL	PAINTED
REDUCER BASE, HBL4750	STEEL	PAINTED
REDUCER BASE, HBL2000	STEEL	GALVANIZED
REDUCER BARRIERS	STEEL	GALVANIZED

SYM	REVISIONS	APP	DATE
1	RELEASED PER DCN13354		3/6/07

THE DESIGN AND DIMENSIONS OF THE PRODUCT SHOWN ON THIS DRAWING ARE SUBJECT TO CHANGE WITHOUT NOTICE

TITLE
RACEWAY REDUCERS
HBL2400/HBL2400D SERIES

TOLERANCES UNLESS OTHERWISE SPECIFIED
FRACTIONS ± 1/64
DECIMALS ± .005
ANGLES ± 2°

WIRING DEVICE-KELLEMS
HUBBELL INCORPORATED
BRIDGEPORT, CT

DR. BY SRE	APP. BY
TR. BY	SCALE 1:1
CHK'D BY	DATE 3/6/07

DIMENSION SHEET FOR CAT. NO. SEE TABLE

REPAIRABLE ☐ NON-REPAIRABLE ☒

B

M-10336

1