M-9229 | 1

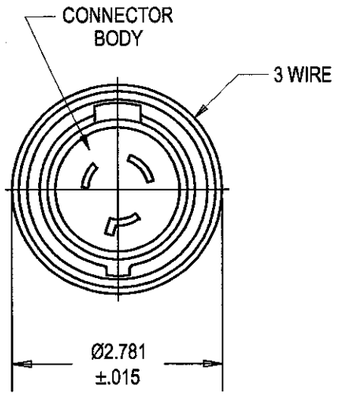

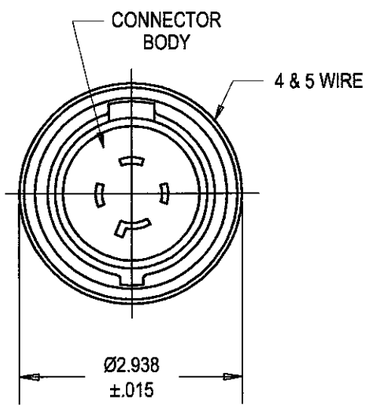

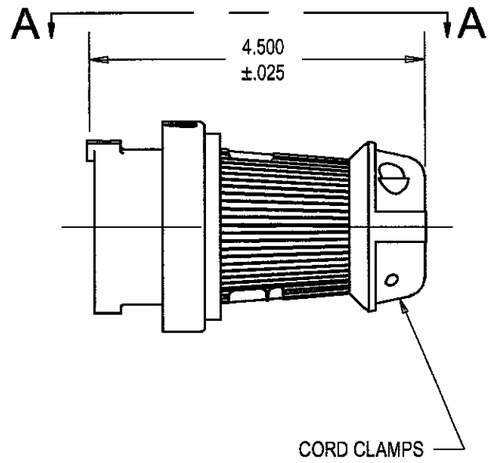

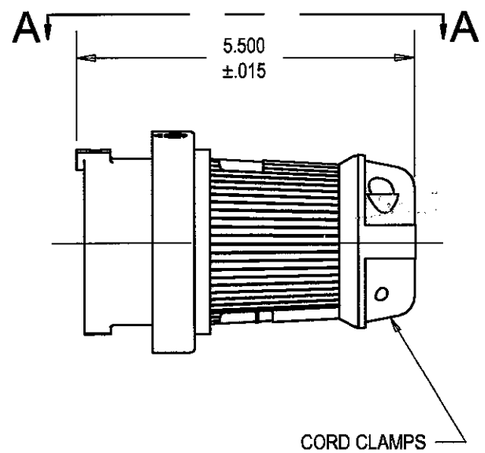

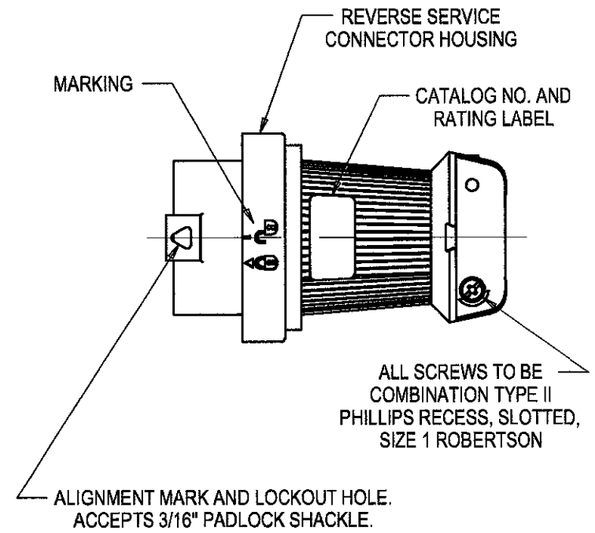

VIEW A–A

	CONNECTOR[1]	CONFIGURATION RATING	MATING PLUG[2]	MATING INLET[2]	MATING NEMA PLUG[3]		IEC COLOR CODE
	CATALOG #		CATALOG #	CATALOG #	NEMA #	HUBBELL #	
3 WIRE	HBL2313SR	20A 125V	HBL2311SWR	HBL2315SWR	L5-20R	2311	YELLOW
	HBL2323SR	20A 250V	HBL2321SWR	HBL2325SWR	L6-20R	2321	BLUE
	HBL2333SR	20A 277VAC	HBL2331SWR	HBL2335SWR	L7-20R	2331	GRAY
4 WIRE	HBL2413SR	20A 125/250V	HBL2411SWR	HBL2415SWR	L14-20R	2411	ORANGE
	HBL2423SR	20A 250V 3Ø	HBL2421SWR	HBL2425SWR	L15-20R	2421	BLUE
	HBL2433SR	20A 480V 3Ø	HBL2431SWR	HBL2435SWR	L16-20R	2431	RED
5 WIRE	HBL2513SR	20A 120/208V 3ØY	HBL2511SWR	HBL2515SWR	L21-20R	2511	BLUE
3 WIRE	HBL2613SR	30A 125V	HBL2611SWR	HBL2615SWR	L5-30R	2611	YELLOW
	HBL2623SR	30A 250V	HBL2621SWR	HBL2625SWR	L6-30R	2621	BLUE
4 WIRE	HBL2713SR	30A 125/250V	HBL2711SWR	HBL2715SWR	L14-30R	2711	ORANGE
	HBL2723SR	30A 250V 3Ø	HBL2721SWR	HBL2725SWR	L15-30R	2721	BLUE
	HBL2733SR	30A 480V 3Ø	HBL2731SWR	HBL2735SWR	L16-30R	2731	RED
	HBL2743SR	30A 600V 3Ø	HBL2741SWR	HBL2745SWR	L17-30R	2741	BLACK
5 WIRE	HBL2813SR	30A 120/208V 3ØY	HBL2811SWR	HBL2815SWR	L21-30R	2811	BLUE

[1] DOES NOT MATE WITH NEMA RECEPTACLES
[2] TYPES 4,4X,12 WHEN CONNECTED
[3] TYPE I WHEN CONNECTED

U.L. LISTED, C.S.A. CERTIFIED

CODE 74545

LIST OF PARTS

DESCRIPTION	MATERIAL	FINISH
PLUG HOUSING	PBTP	
CORD CLAMPS	PBTP	
SEALS	CBR	
BODY	PA66	
SCREWS	302SS	

SYM	REVISIONS	APP	DATE
1	10/24/03 "X" REMOVED; LAST X–REVISION WAS X–0. RELEASED FOR PRODUCTION PER DCN #11263. JMN PJB	JPP	10/24/03

THE DESIGN AND DIMENSIONS OF THE PRODUCT SHOWN ON THIS DRAWING ARE SUBJECT TO CHANGE WITHOUT NOTICE

TITLE SAFETY–SHROUD™ TWIST–LOCK® REVERSE SERVICE CONNECTORS

TOLERANCES UNLESS OTHERWISE SPECIFIED
FRACTIONS ±1/64
DECIMALS ±.005
ANGLES ±2°

WIRING DEVICE–KELLEMS
HUBBELL INCORPORATED
BRIDGEPORT, CT

DR. BY	JMN	APP. BY	JPP
TR. BY		SCALE	1:2
CHK'D BY	JPP	DATE	10/24/03

DIMENSION SHEET FOR CAT. NO. SEE TABLE

REPAIRABLE ☐ NON-REPAIRABLE ☐

B

M-9229

1