M11614 2

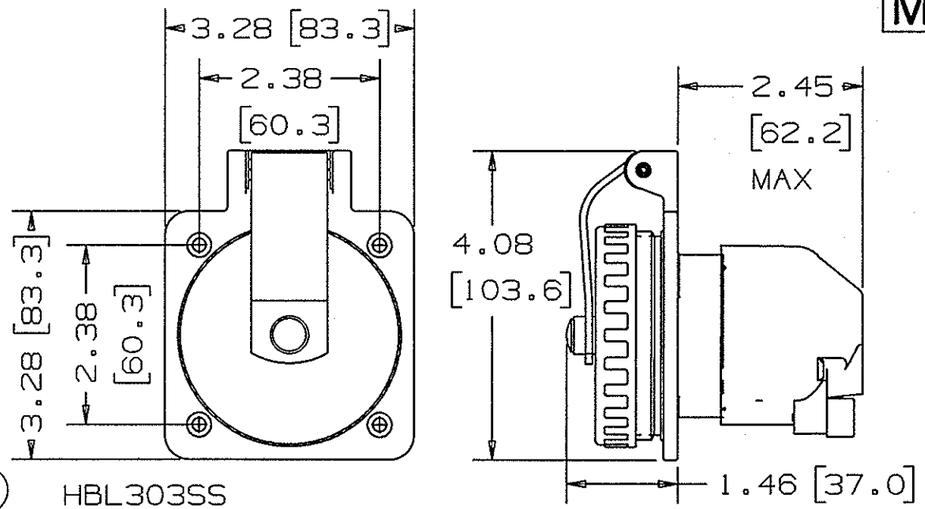

(A) HBL303SS

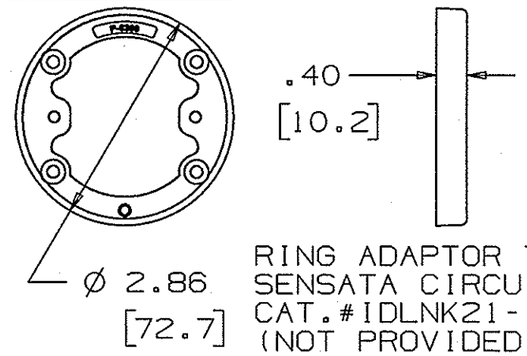

(B) RING ADAPTOR TO BE USED WITH SENSATA CIRCUIT BREAKER CAT.#IDLNK21-1REC5-38140-30-G1 (NOT PROVIDED) AND NORTH SHORE SAFETY GROUND FAULT SENSING MODULE CAT. # PGFM-111-B-A1-188 (NOT PROVIDED)

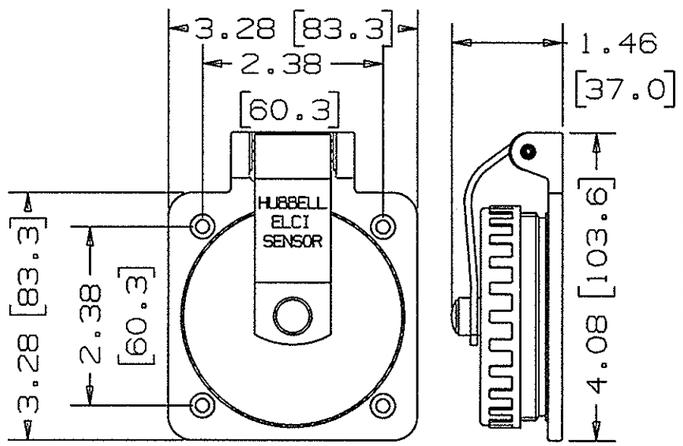

(C) COVER & FLANGE ASSY FOR SENSOR

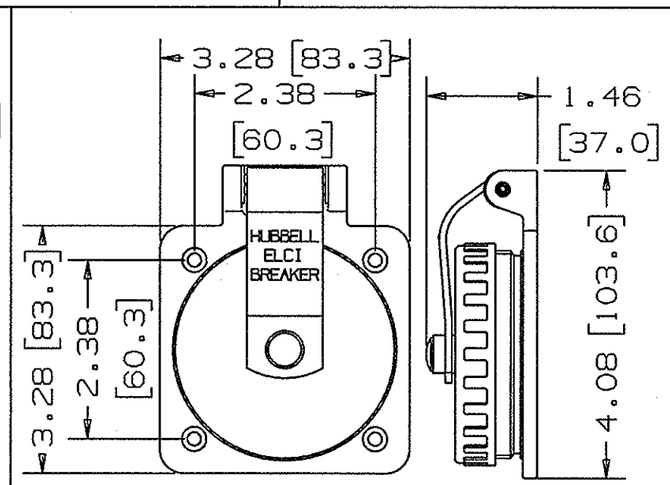

(D) COVER & FLANGE ASSY FOR BREAKER

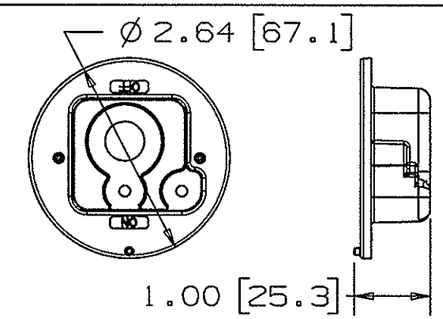

CUP ADAPTOR TO BE USED WITH SENSATA CIRCUIT BREAKER CAT. # IDLNK21-1REC5-38140-30-G1 (NOT PROVIDED)

(E)

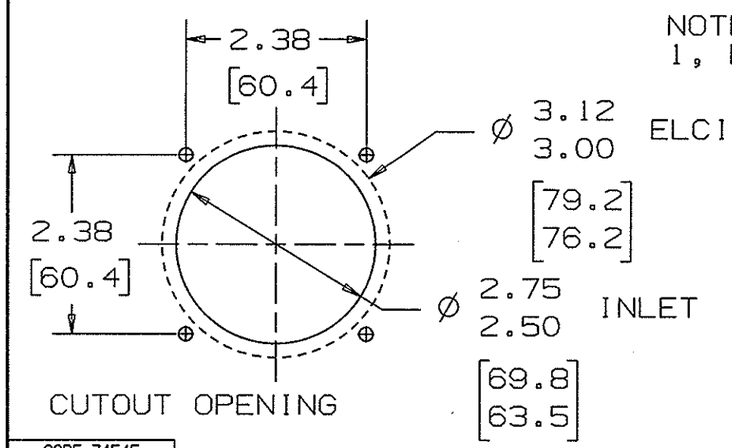

CUTOUT OPENING

NOTE: (UNLESS OTHERWISE SPECIFIED)
1, DIMENSIONS ARE IN INCHES[MM]

CAT. NO.	CONSISTS OF
HBL303SSELCI	A, B, C, D, E
HBL303SSELCIS	A, B, C

CODE 74545

LIST OF PARTS

DESCRIPTION	MATERIAL	FINISH
COVER & FLANGE ASSY	ST. STEEL	
INTERIOR	NYLON	
BLADES	BRASS	NICKEL PLATE
INTERIOR SCREWS	ST. STEEL	
MOUNTING SCREWS	BRASS	CHROME
STRAIN RELIEF	NYLON	
STRAIN RELIEF SCREWS	ST. STEEL	
GASKETS	NEOPRENE	
ADAPTORS	POLYESTER	WHITE

SYM	REVISIONS	APP	DATE
2	REMOVE CAT# HBL303SSELCIC AND COMPONENT F PER DCN #17691.	DLI D.W	05/12/11
1	RELEASED FOR PRODUCTION PER DCN #16708	DLI	06/17/10

THE DESIGN AND DIMENSIONS OF THE PRODUCT SHOWN ON THIS DRAWING ARE SUBJECT TO CHANGE WITHOUT NOTICE

TITLE
STAINLESS STEEL
SHORE POWER INLET
AND ELCI KITS

TOLERANCES UNLESS OTHERWISE SPECIFIED
FRACTIONS ±1/64
DECIMALS ±.005
ANGLES ±2°

WIRING DEVICE-KELLEMS
HUBBELL INCORPORATED
BRIDGEPORT, CT

DR. BY DLI	APP. BY
TR. BY	SCALE 1:2
CHK'D BY	DATE 6/17/10

DIMENSION SHEET FOR CAT. NO. SEE TABLE

REPAIRABLE ☐ NON-REPAIRABLE ☒

B

M11614

2