M-13632 | 1

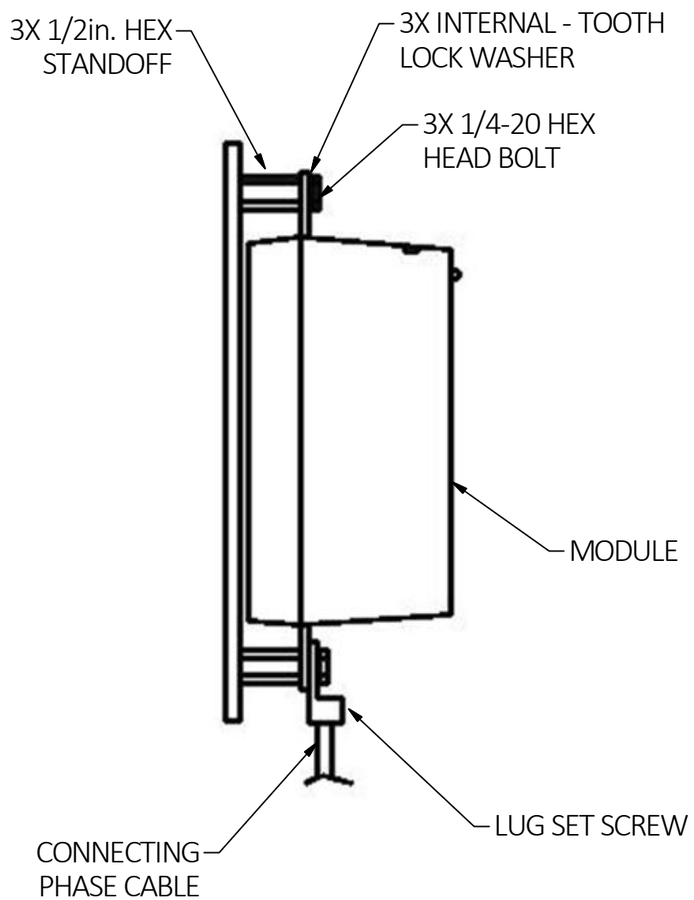

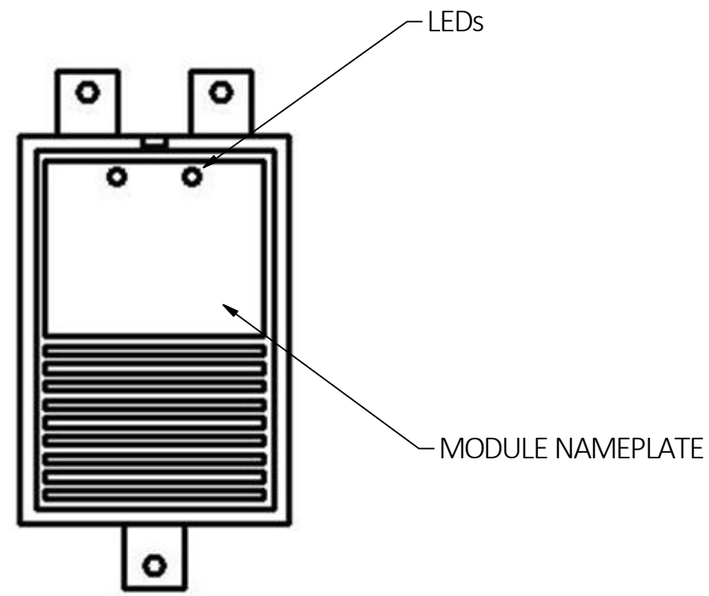

NOTES: (UNLESS OTHERWISE SPECIFIED)
1. DIMENSIONS ARE INCHES (mm)
2. .XX TOLERANCES TO BE ±.03
3. FOR REPLACEMENT ONLY.

CAT. NO. *	VOLTAGE, PHASE	PHASE
HBL3P120CM	120/240V	1PH
HBL4P120CM	120/208V	3PH
HBL6P120CM	240/120V	3PH
HBL8P120CM	277/480V	3PH
HBL9P120CM	480V	3PH
HBL10P120CM	347/600V	3PH
HBL11P120CM	600V	3PH

LIST OF PARTS

DESCRIPTION	MATERIAL	FINISH

DIMENSION SHEET FOR CAT. NO. SEE TABLE

REV	DESCRIPTION	APP	DATE
1	NEW RELEASE PER DCN 23003. MYA	SL	5/18/17

THE DESIGN AND DIMENSIONS OF THE PRODUCT SHOWN ON THIS DRAWING ARE SUBJECT TO CHANGE WITHOUT NOTICE. DIMENSIONS ARE IN INCHES [mm].

TITLE

SURGE PROTECTIVE DEVICE REPLACEMENT MODULE, 120kA

WIRING DEVICE-KELLEMS
HUBBELL INCORPORATED
SHELTON, CT

TOLERANCES UNLESS OTHERWISE SPECIFIED
.XX = ± .01
.XXX= ± .005
ANGLE TOL. ±2°

DR. BY	MALLEN	SCALE	NONE
CHK. BY	SL	DATE	5/18/17

B

M-13632

1

CAGE CODE 74545