M-10375 | 3

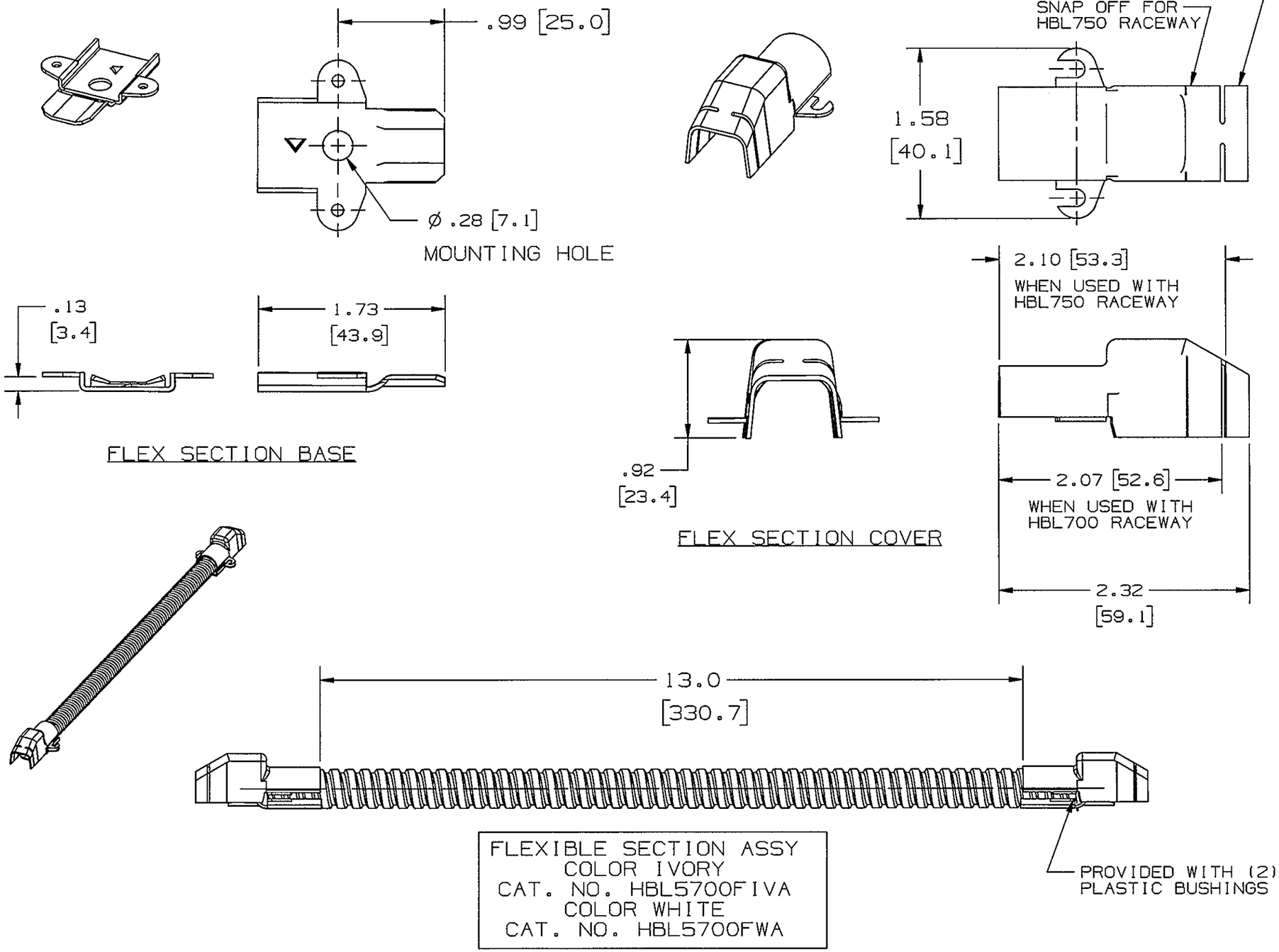

FLEXIBLE SECTION ASSY
COLOR IVORY
CAT. NO. HBL5700FIVA
COLOR WHITE
CAT. NO. HBL5700FWA

NOTES: 1) ALL DIMENSIONS IN INCHES AND [MM]
2) NON "A" VERSION CATALOG NOS. FOR USE WITH HBL500 & HBL750 RACEWAYS ONLY. NON "A" VERSION CATALOG NOS. WILL BE PHASED OUT.

CODE 74545

LIST OF PARTS

DESCRIPTION	MATERIAL	FINISH
FLEX COVER	STEEL	PAINTED
FLEX BASE	STEEL	GALVANIZED
FLEX SECTION	STEEL	PAINTED
FLEX BUSHING	PLASTIC	RED

DIMENSION SHEET FOR CAT. NO. SEE TABLE

REPAIRABLE ☐ NON-REPAIRABLE ☒

SYM	REVISIONS	APP	DATE
3	ADDED "A" SUFFIX TO CAT NOS. ADDED NOTE 2 DCN19741	SRE	4/4/13
2	ADDED HBL5700FW, WHITE; SEE TABLE WAS HBL5700FIV PER DCN 15094 RCM	DJP	8/15/08
1	RELEASED PER DCN 13536	SRE	11/13/06

THE DESIGN AND DIMENSIONS OF THE PRODUCT SHOWN ON THIS DRAWING ARE SUBJECT TO CHANGE WITHOUT NOTICE

TITLE
METAL RACEWAY
FLEXIBLE SECTION ASSY.
HBL500/700/750 SERIES

TOLERANCES UNLESS OTHERWISE SPECIFIED
.XX = ± .01
.XXX = ± .005
ANGLES = ± 2°

WIRING DEVICE-KELLEMS
HUBBELL INCORPORATED
SHELTON, CT

DR. BY SRE	APP. BY SRE
TR. BY	SCALE NONE
CHK. BY SRE	DATE 11/13/06

B

M-10375

3