M-10371 | 4

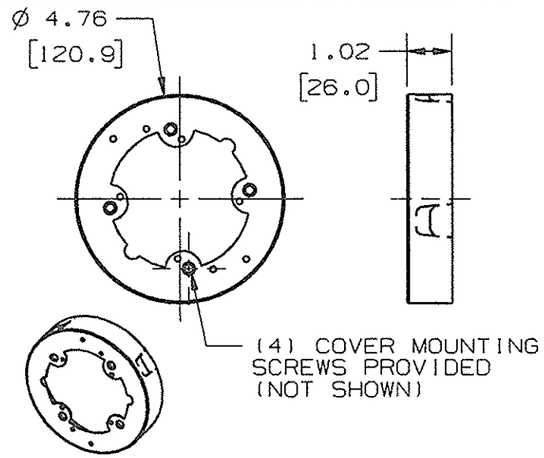

BOX COVER		
CAT. NO. HBL5737IVA HBL5738IVA	COLOR IVORY	VOLUME 16.0in³ [262.2cm³]
HBL5737WA HBL5738WA	WHITE	16.0in³ [262.2cm³]

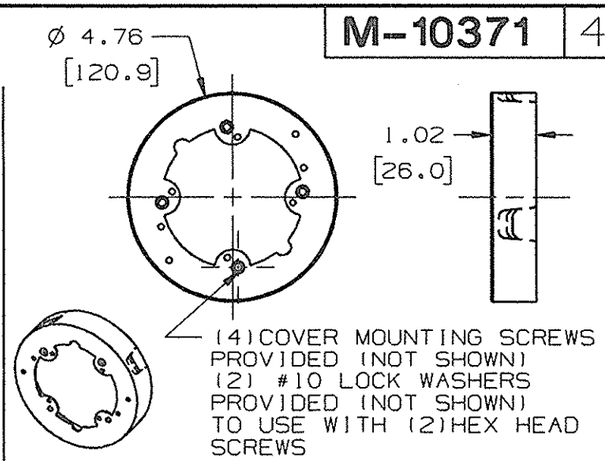

BOX COVER		
CAT. NO. HBL5737AIVA HBL5738AIVA HBL5738AFIVA	COLOR IVORY	VOLUME 22.0in³ [360.4cm³]
HBL5737AWA HBL5738AWA HBL5738AFWA	WHITE	22.0in³ [360.4cm³]

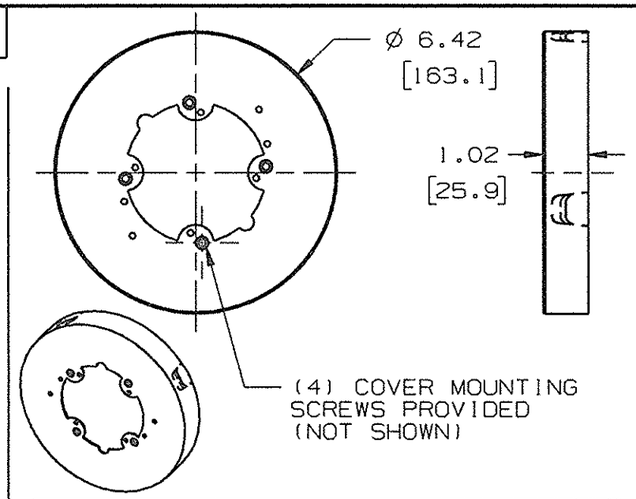

BOX COVER		
CAT. NO. HBL5739IVA HBL5739AIVA	COLOR IVORY	VOLUME 29.5in³ [483.2cm³]
HBL5739WA	WHITE	29.5in³ [483.2cm³]

MOUNTING CENTERS ALL MODELS: 2 3/4" [69.85], 3 1/2" [88.9] & 4 1/16" [103.12] #8-32 TAPPED HOLES

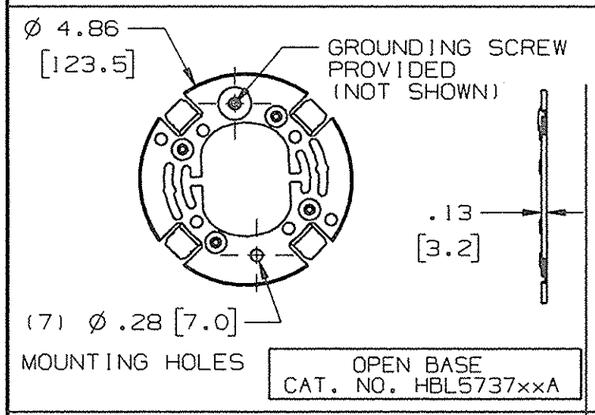

OPEN BASE
CAT. NO. HBL5737xxA

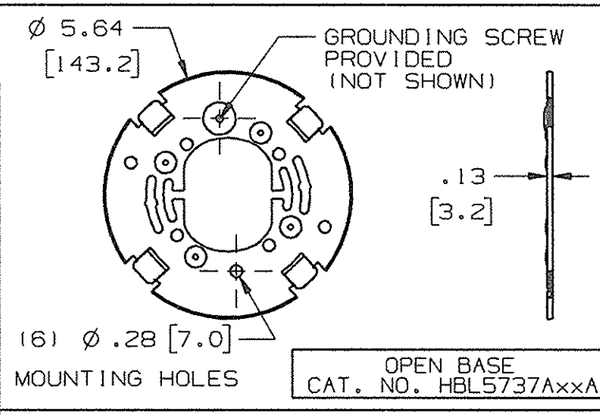

OPEN BASE
CAT. NO. HBL5737AxxA

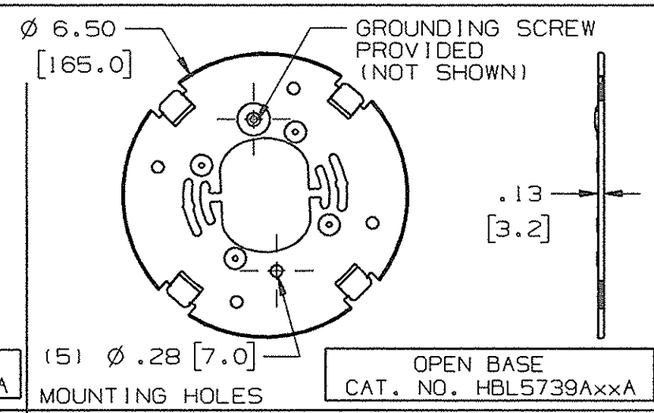

OPEN BASE
CAT. NO. HBL5739AxxA

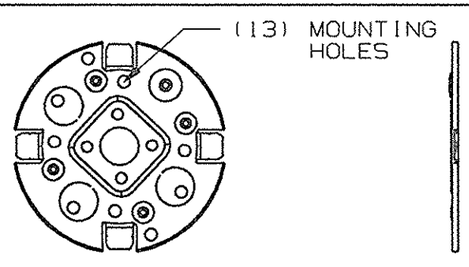

SOLID BASE - CAT. NO. HBL5738xxA

SAME AS OPEN BASE EXCEPT FOR MOUNTING HOLES

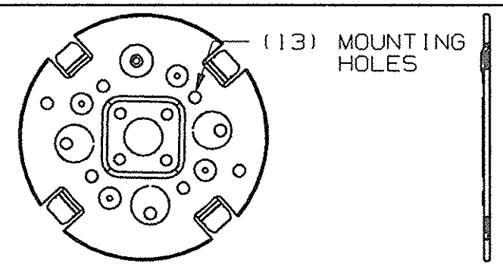

SOLID BASE - CAT. NO. HBL5738AxxA

SAME AS OPEN BASE EXCEPT FOR MOUNTING HOLES

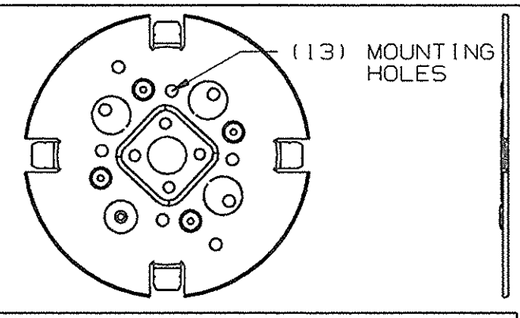

SOLID BASE - CAT. NO. HBL5739xxA

SAME AS OPEN BASE EXCEPT FOR MOUNTING HOLES

CODE 74545

LIST OF PARTS

DESCRIPTION	MATERIAL	FINISH
BOX BASE	STEEL	GALVANIZED
BOX COVER	STEEL	PAINTED
STANDOFFS	STEEL	GALVANIZED

xx = COLOR SUFFIXES

NOTES:
1) ALL DIMENSIONS IN INCHES AND [MM]
2) NON "A" VERSION CATALOG NOS. FOR USE WITH HBL500 & HBL750 RACEWAYS ONLY. NON "A" VERSION CATALOG NOS. WILL BE PHASED OUT.

SYM	REVISIONS	APP	DATE
4	(4)COVER MOUNTING SCREWS PROVIDED (NOT SHOWN) (2) #10 LOCK WASHERS PROVIDED (NOT SHOWN) TO USE WITH (2) HEX HEAD SCREWS WAS (4)COVER MOUNTING SCREWS PROVIDED (NOT SHOWN) (IN TOP CENTER COVER VIEW). SOLID BASE - CAT. NO. HBL5738AxxA WAS CAT. NO. HHBL5738AxxA PER DCN #19895.MJZ, TLS	MJZ	6/6/13
3	ADDED "A" SUFFIX TO CAT NOS. ADDED NOTE 2 DCN19741	SRE	4/5/13
2	ADDED CAT. NO'S FOR WHITE; "xx" WAS "IV"; ADDED NOTE FOR "xx" CALLOUT PER DCN 13745 RCM	DJP	2/27/07
1	RELEASED PER DCN 13536	SRE	11/13/06

THE DESIGN AND DIMENSIONS OF THE PRODUCT SHOWN ON THIS DRAWING ARE SUBJECT TO CHANGE WITHOUT NOTICE

TITLE
EXTENSION BOXES
METAL RACEWAY
HBL500/700/750 SERIES

TOLERANCES UNLESS OTHERWISE SPECIFIED
.XX = ±.01
.XXX = ±.005
ANGLES = ±2°

WIRING DEVICE-KELLEMS
HUBBELL INCORPORATED
SHELTON, CT

DR. BY SRE	APP. BY SRE
TR. BY	SCALE 1:1
CHK. BY SRE	DATE 11/13/06

DIMENSION SHEET FOR CAT. NO. SEE TABLE

REPAIRABLE ☐ NON-REPAIRABLE ☒

B

M-10371

4