M-10378 | 2

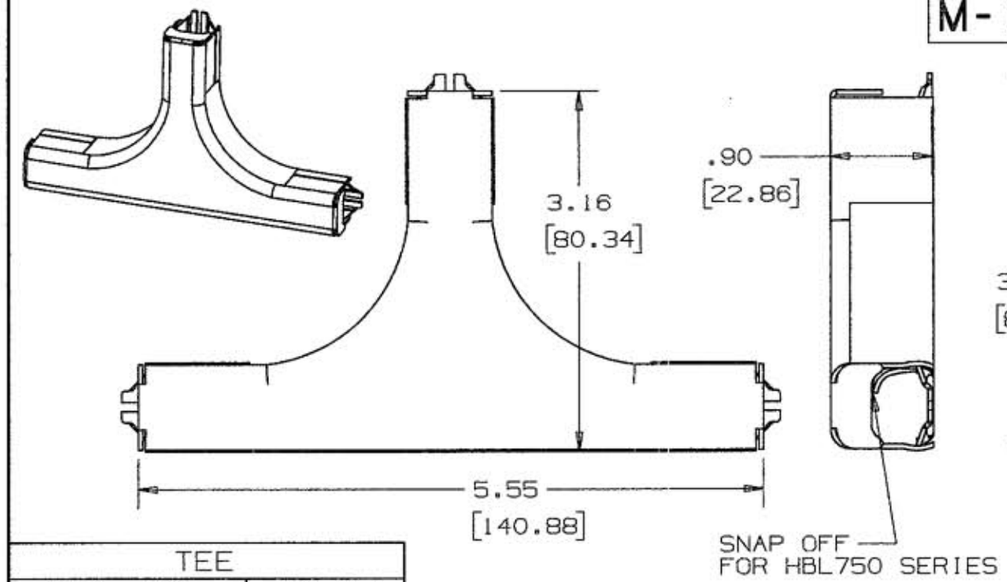

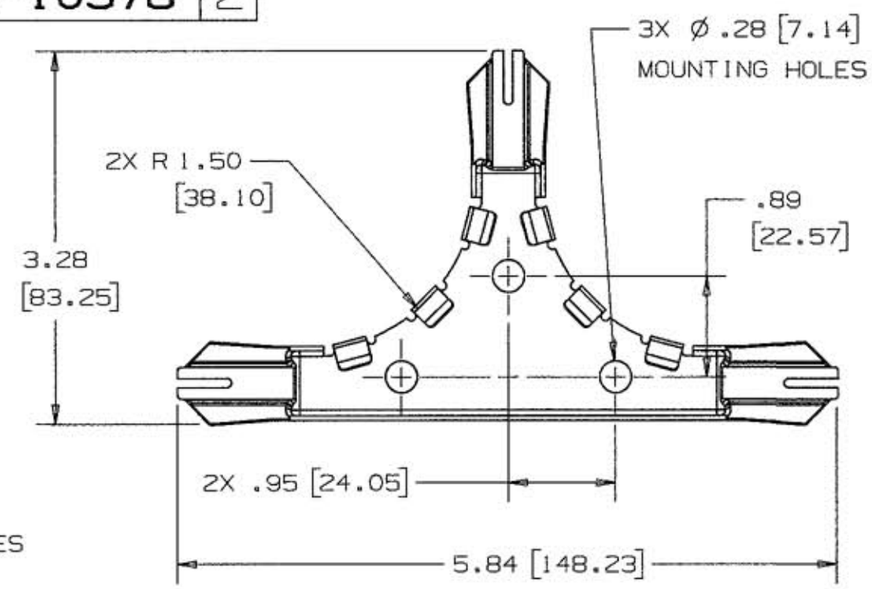

TEE	
CAT. NO. HBL5715BRIV	COLOR IVORY

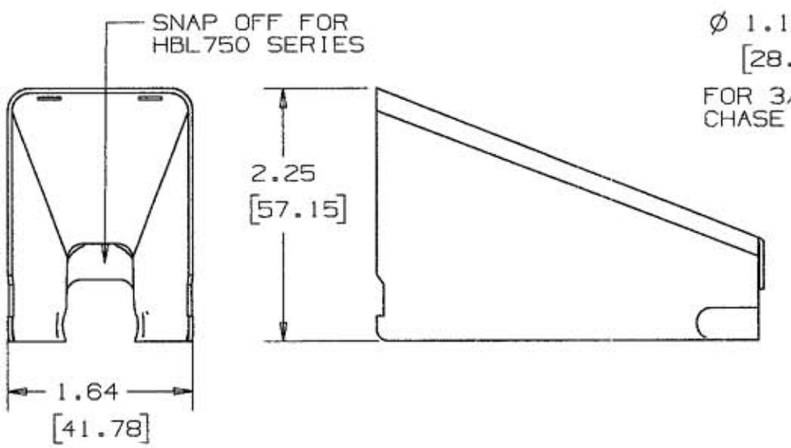

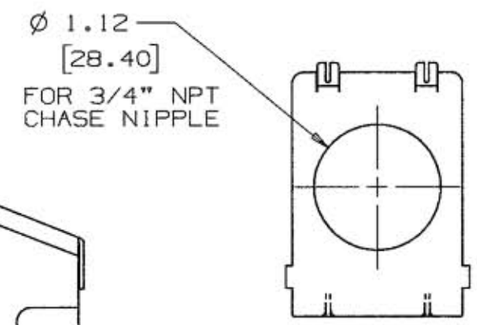

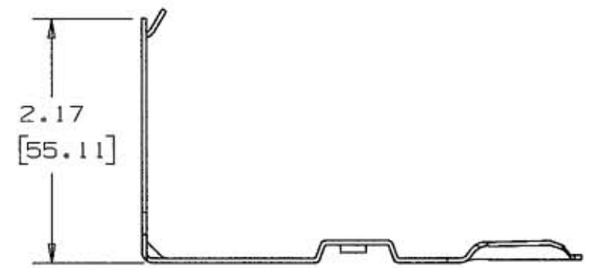

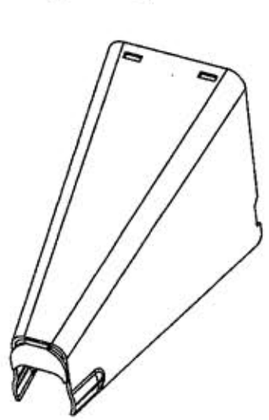

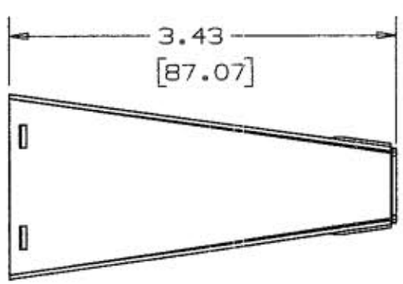

CONNECTOR COVER
PROVIDED WITH CHASE NIPPLE
(NOT SHOWN)

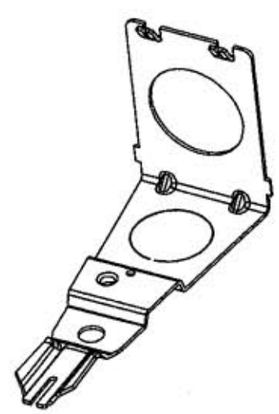

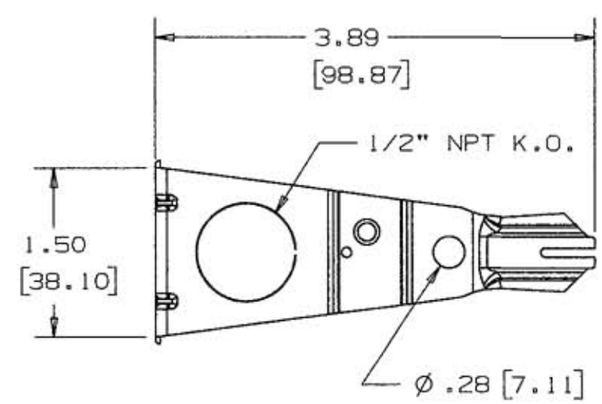

CONNECTOR BASE

END FEED CONNECTOR	
CAT. NO. HBL5786AIV	COLOR IVORY
HBL5786AW	WHITE

NOTE: ALL DIMENSIONS IN INCHES AND [MM]

CODE 74545

LIST OF PARTS

DESCRIPTION	MATERIAL	FINISH
TEE COVER	STEEL	PAINTED
TEE BASE	STEEL	GALVANIZED
CHASE NIPPLE	CAST	GALVANIZED
CONNECTOR COVER	STEEL	PAINTED
CONNECTOR BASE	STEEL	GALVANIZED

SYM	REVISIONS	APP	DATE
2	ADDED "HBL5786AW" TO END FEED CONNECTOR TABLE PER DCN 13745 RCM	DJP	2/27/07
1	RELEASED PER DCN13536	SRE	11/13/06

THE DESIGN AND DIMENSIONS OF THE PRODUCT SHOWN ON THIS DRAWING ARE SUBJECT TO CHANGE WITHOUT NOTICE

TITLE
METAL RACEWAY
MISC. PARTS
HBL500/HBL750 SERIES

TOLERANCES UNLESS OTHERWISE SPECIFIED
FRACTIONS ± 1/64
DECIMALS ± .005
ANGLES ± 2°

WIRING DEVICE-KELLEMS
HUBBELL INCORPORATED
BRIDGEPORT, CT

DR. BY SRE	APP. BY SRE
TR. BY	SCALE 1 : 1
CHK'D BY SRE	DATE 11/13/06

DIMENSION SHEET FOR CAT. NO. SEE TABLE

REPAIRABLE ☐ NON-REPAIRABLE ☒

B

M-10378

N