M-7837

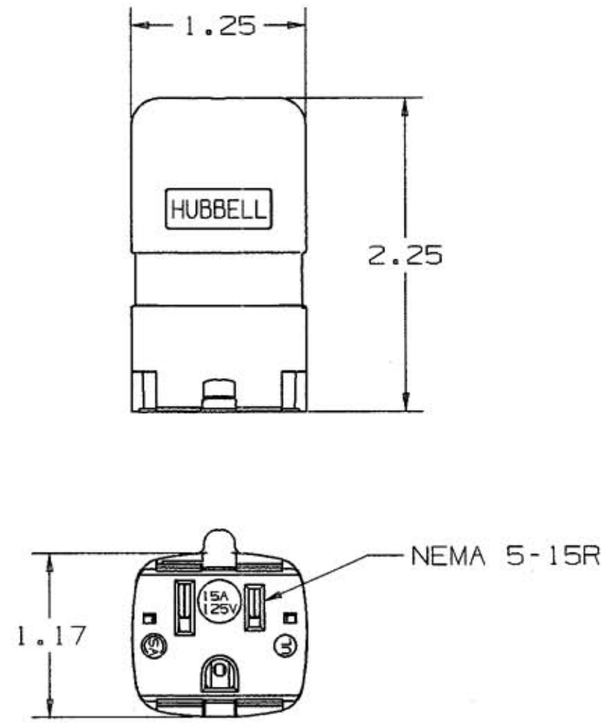

CATALOG NO.	COLOR	DESCRIPTION
HBL5963VY	YELLOW	
HBL5963VYB	YELLOW	BULK PACKAGED
HBL5963VBK	BLACK	
HBL5963VBKB	BLACK	BULK PACKAGED

LIST OF PARTS

DESCRIPTION	MATERIAL	FINISH
HOUSING	NYLON	
LINE CONTACT	BRASS	NICKELPL.
LINE CONTACT	BRASS	
GRD CONTACT	BRASS	
SCREW CAPTIVE	STEEL	ZINC PL.

SYM	REVISIONS	APP	DATE
2	06/05/98 PER DCN 6012 HOSPITAL GR REMOVED B.C.	JZ	6/11/98
1	NEW RELEASE PER DCN 5598 CAC	~~JZ~~ MJL	~~6/11/98~~ 11/4/97

THE DESIGN AND DIMENSIONS OF THE PRODUCT SHOWN ON THIS DRAWING ARE SUBJECT TO CHANGE WITHOUT NOTICE

TITLE
INSULATION DISPLACEMENT VALISE CONNECTOR

TOLERANCES UNLESS OTHERWISE SPECIFIED
~~FRACTIONS ±1/64~~
~~DECIMALS ±.005~~
~~ANGLES ±2°~~

WIRING DEVICE-KELLEMS
HUBBELL INCORPORATED
BRIDGEPORT, CT

DR. BY CAC	APP. BY ZMM
TR. BY	SCALE 1:1
CHK'D BY ZMM	DATE 11/13/97

DIMENSION SHEET FOR CAT. NO.

REPAIRABLE ☐ NON-REPAIRABLE ☒

B M-7837

CODE 74545