M-10413 | 1

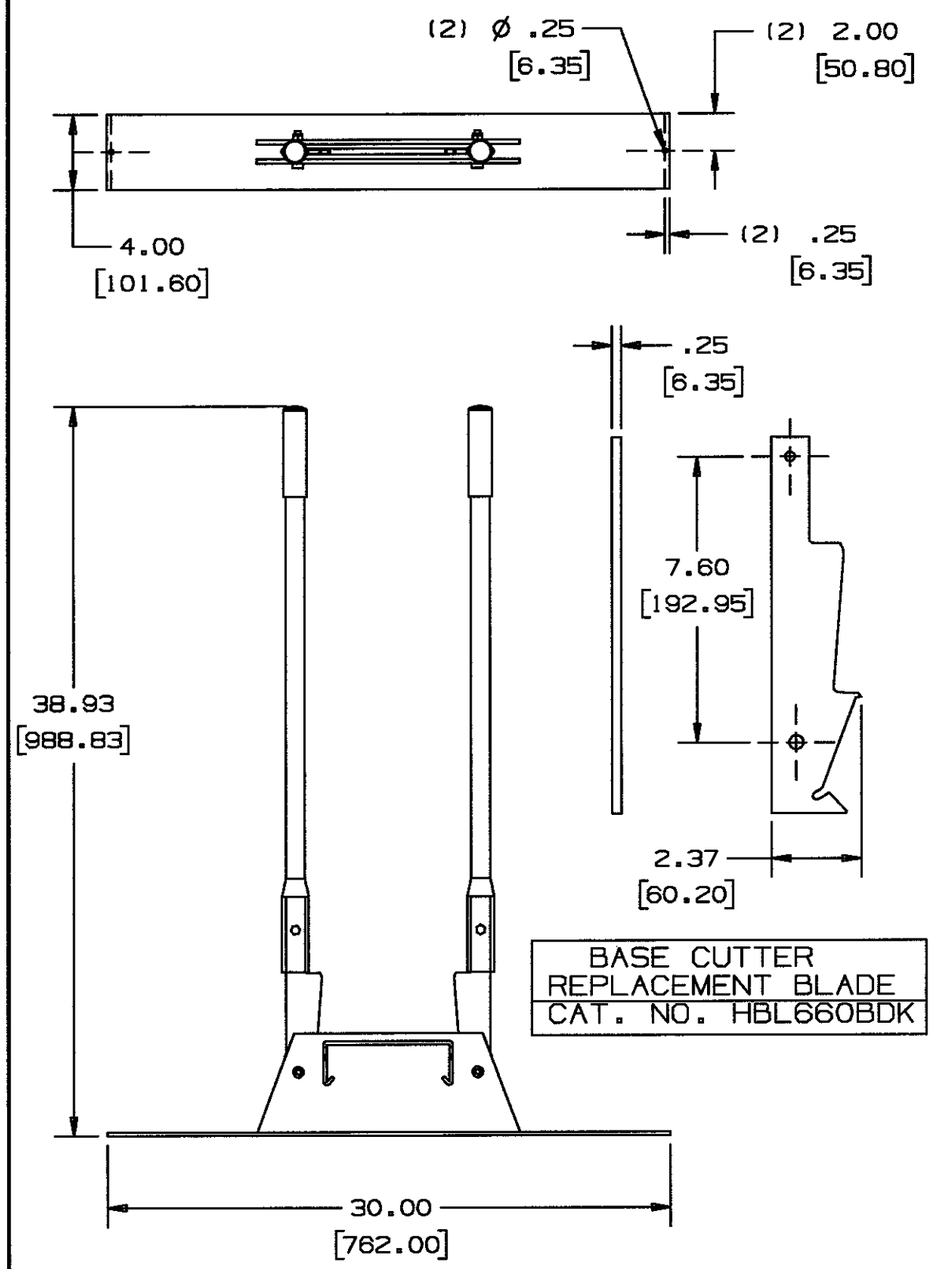

BASE CUTTER REPLACEMENT BLADE
CAT. NO. HBL660BDK

BASE CUTTER
CAT. NO. HBL660B

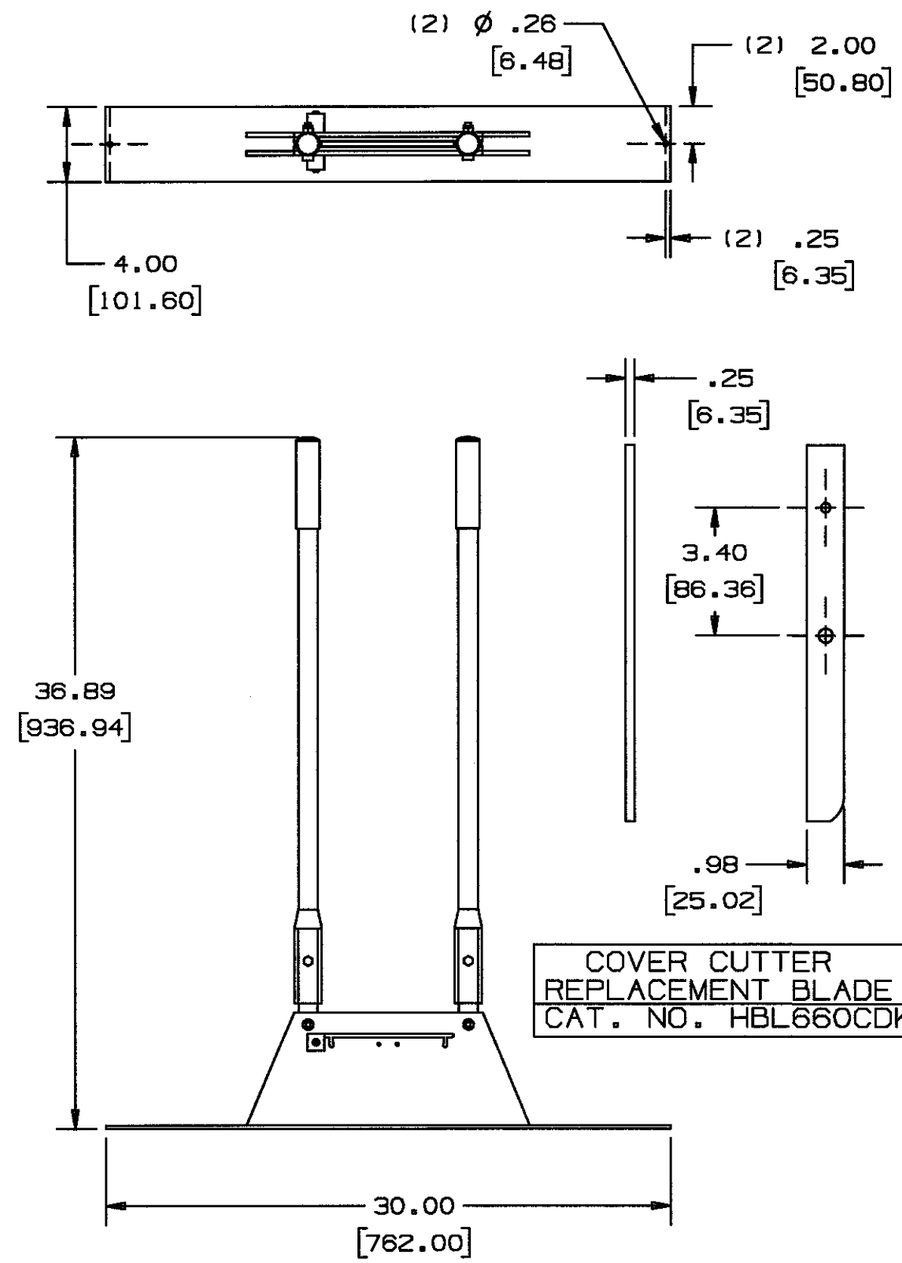

COVER CUTTER REPLACEMENT BLADE
CAT. NO. HBL660CDK

COVER CUTTER
CAT. NO. HBL660C

NOTE: ALL DIMENSIONS IN INCHES AND [MM]

CODE 74545

LIST OF PARTS

DESCRIPTION	MATERIAL	FINISH
RACEWAY CUTTER ASSY.	STEEL	PAINTED
REPLACEMENT BLADE	STEEL	

SYM	REVISIONS	APP	DATE
1	RELEASED PER DCN 13555		11/16/06

THE DESIGN AND DIMENSIONS OF THE PRODUCT SHOWN ON THIS DRAWING ARE SUBJECT TO CHANGE WITHOUT NOTICE

TITLE
RACEWAY CUTTERS
HBL6750 SERIES

TOLERANCES UNLESS OTHERWISE SPECIFIED
FRACTIONS ±1/64
DECIMALS ±.005
ANGLES ±2°

WIRING DEVICE-KELLEMS
HUBBELL INCORPORATED
BRIDGEPORT, CT

DR. BY SRE | APP. BY
TR. BY | SCALE 1:1
CHK'D BY | DATE 11/16/06

DIMENSION SHEET FOR CAT. NO. SEE TABLE

REPAIRABLE ☐ NON-REPAIRABLE ☒

B

M-10413

1