M-12404 | 2

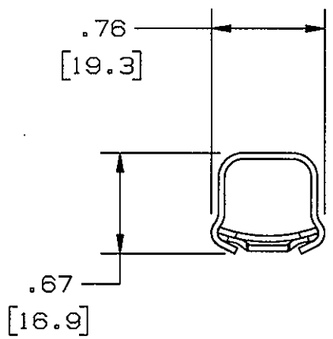

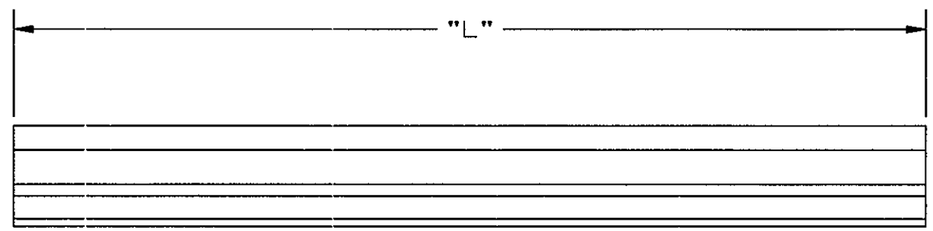

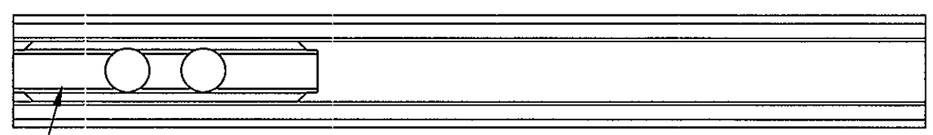

COUPLING CAT. NO. HBL5701C
ONE PROVIDED PER "L"

CAT. NO.	"L"	COLOR
HBL700IV	10 FT, 3 M	IVORY
HBL700W	10 FT, 3 M	WHITE

NOTE: ALL DIMENSIONS IN INCHES AND [MM]

LIST OF PARTS

DESCRIPTION	MATERIAL	FINISH
RACEWAY COVER	STEEL	PAINTED
RACEWAY BASE	STEEL	GALVANIZED
COUPLING	STEEL	GALVANIZED

SYM	REVISIONS	APP	DATE
2	UPDATED CATALOG NO.'S PER DCN20378	AD	3/5/14
1	RELEASED PER DCN19741	SRE	4/2/13

THE DESIGN AND DIMENSIONS OF THE PRODUCT SHOWN ON THIS DRAWING ARE SUBJECT TO CHANGE WITHOUT NOTICE

TITLE
METAL RACEWAY
HBL700 SERIES, 10 FT.

TOLERANCES UNLESS OTHERWISE SPECIFIED
.XX = ±.01
.XXX = ±.005
ANGLES = ±2°

WIRING DEVICE-KELLEMS
HUBBELL INCORPORATED
SHELTON, CT

DR. BY SRE	APP. BY
TR. BY	SCALE 1:1
CHK. BY	DATE 4/2/13

DIMENSION SHEET FOR CAT. NO. SEE TABLE

REPAIRABLE ☐ NON-REPAIRABLE ☒

B

M-12404

2

CODE 74545