M-10370 | 4

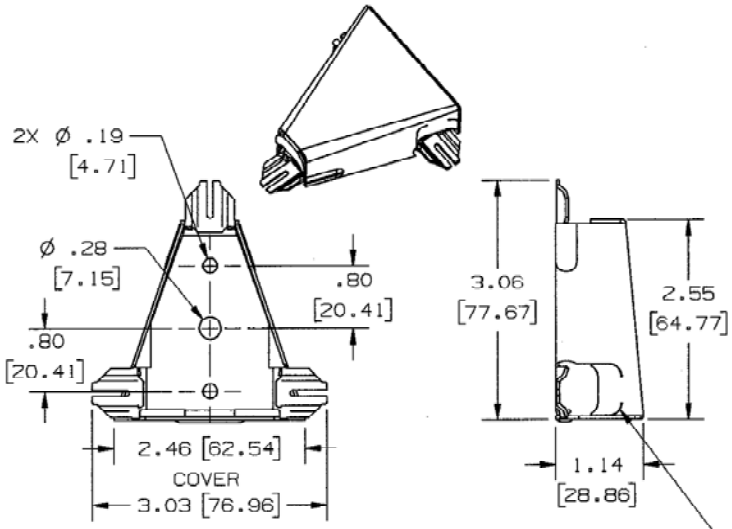

TEE	
CAT. NO.	COLOR
HBL5715IV	IVORY
HBL5715W	WHITE

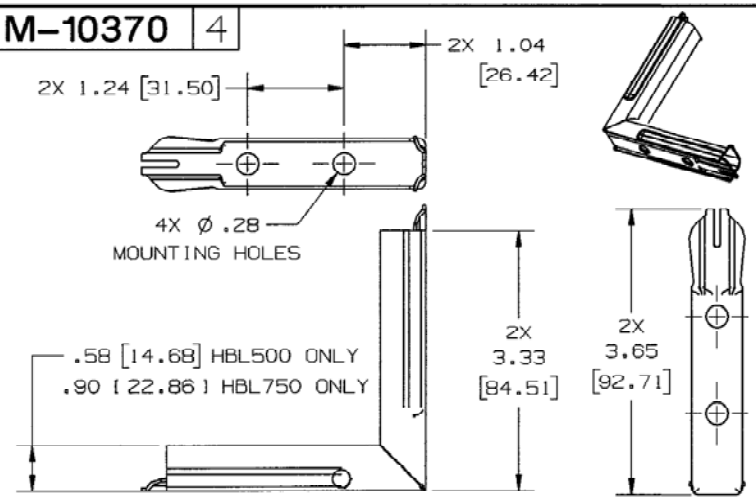

INTERNAL ELBOW	CAT. NO.	COLOR
HBL500 SERIES	HBL517IV	IVORY
HBL500 SERIES	HBL517W	WHITE
HBL750 SERIES	HBL717IV	IVORY
HBL750 SERIES	HBL717W	WHITE

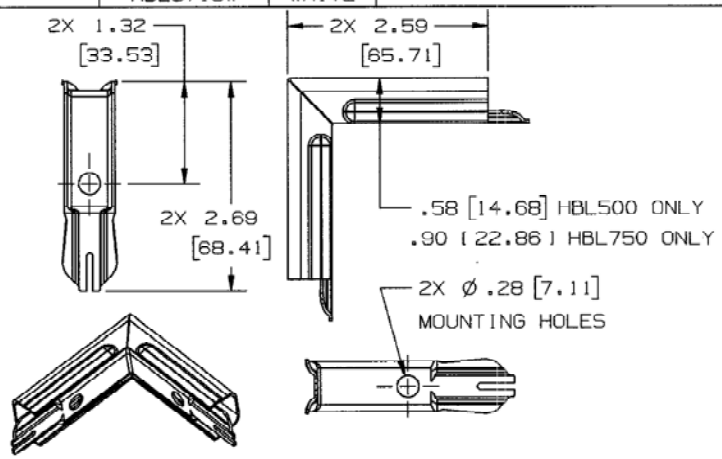

EXTERNAL ELBOW	CAT. NO.	COLOR
HBL500 SERIES	HBL518IV	IVORY
HBL500 SERIES	HBL518W	WHITE
HBL750 SERIES	HBL718IV	IVORY
HBL750 SERIES	HBL718W	WHITE

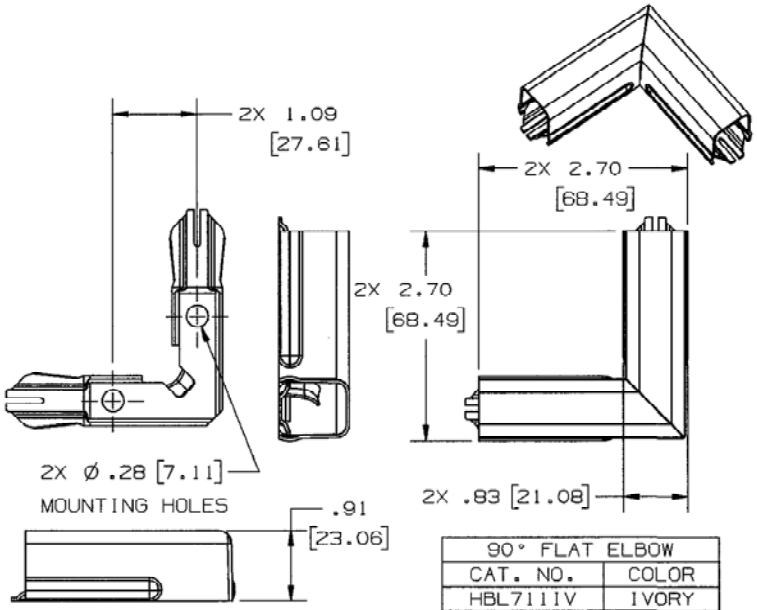

90° FLAT ELBOW	
CAT. NO.	COLOR
HBL711IV	IVORY
HBL711W	WHITE

NOTE: ALL DIMENSIONS IN INCHES AND [MM]

CODE 74545

LIST OF PARTS

DESCRIPTION	MATERIAL	FINISH
TEE COVER	STEEL	PAINTED
TEE BASE	STEEL	GALVANIZED
ELBOW COVERS	STEEL	PAINTED
ELBOW BASES	STEEL	GALVANIZED

SYM	REVISIONS	APP	DATE
4	ADDED HBL517W & HBL518W PER DCN 15218 RCM	DJP	10/29/08
3	HBL750 WAS HBL700 (4X) DCN13911 SRE	SRE	4/23/07
2	ADDED CAT. NO'S FOR WHITE PER DCN 13745 RCM	DJP	2/27/07
1	RELEASED PER DCN 13536	SRF	11/13/06

THE DESIGN AND DIMENSIONS OF THE PRODUCT SHOWN ON THIS DRAWING ARE SUBJECT TO CHANGE WITHOUT NOTICE

TITLE
METAL RACEWAY
ELBOWS
HBL500/HBL750 SERIES

TOLERANCES UNLESS OTHERWISE SPECIFIED
FRACTIONS ±1/64
DECIMALS ±.005
ANGLES ±2°

WIRING DEVICE-KELLEMS
HUBBELL INCORPORATED
BRIDGEPORT, CT

DR. BY SRE | APP. BY SRE
TR. BY | SCALE 1:1
CHK'D BY SRE | DATE 11/13/06

DIMENSION SHEET FOR CAT. NO. SEE TABLE

REPAIRABLE ☐ NON-REPAIRABLE ☒

B

M-10370

4