M-8939 | 3

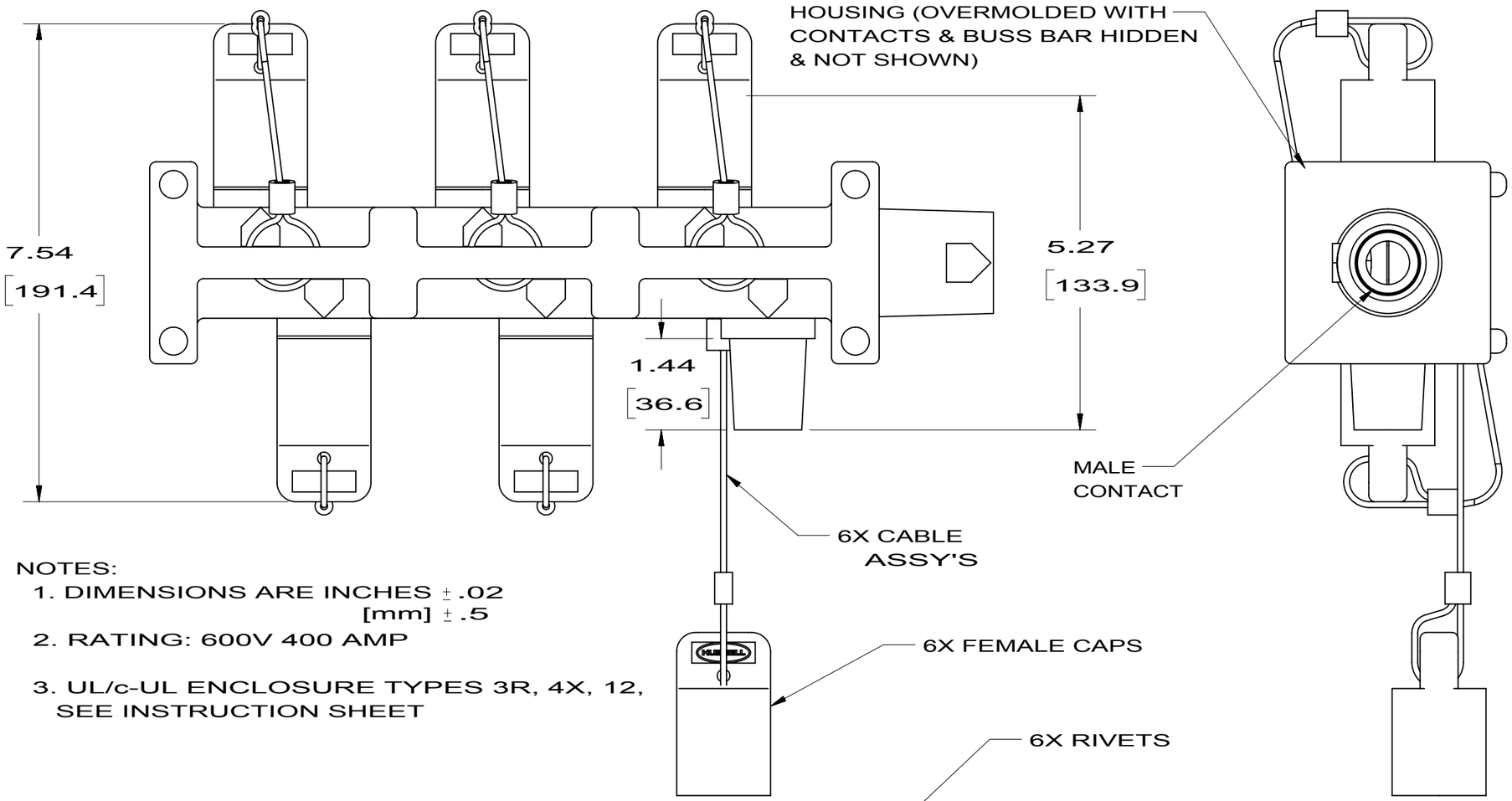

NOTES:
1. DIMENSIONS ARE INCHES ± .02
[mm] ± .5
2. RATING: 600V 400 AMP
3. UL/c-UL ENCLOSURE TYPES 3R, 4X, 12, SEE INSTRUCTION SHEET

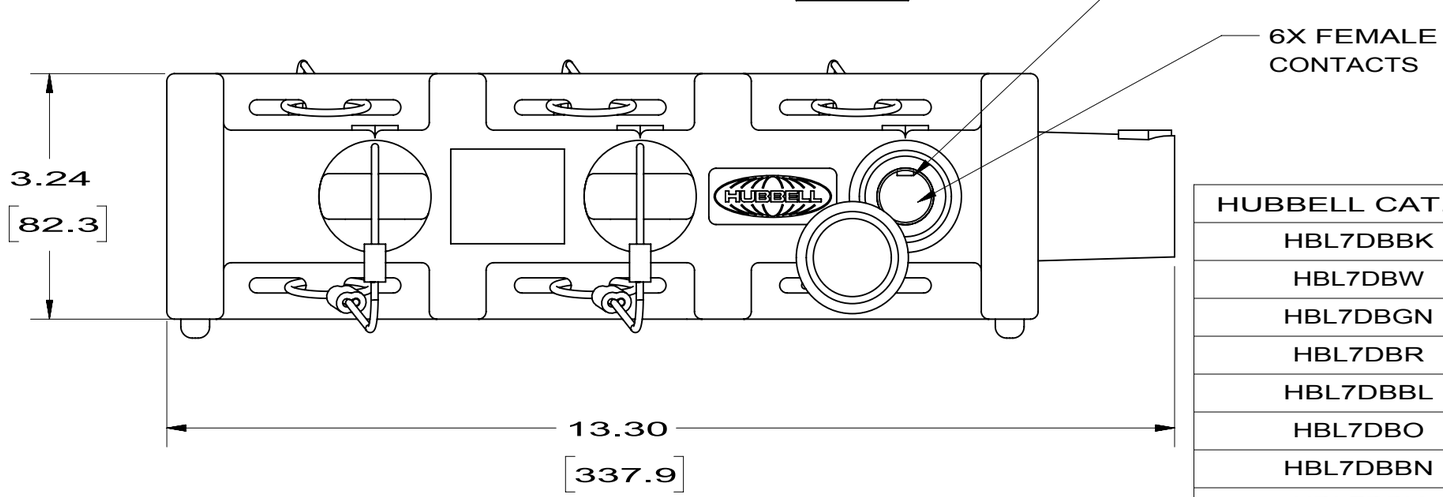

HUBBELL CAT. NO.	COLOR
HBL7DBBK	BLACK
HBL7DBW	WHITE
HBL7DBGN	GREEN
HBL7DBR	RED
HBL7DBBL	BLUE
HBL7DBO	ORANGE
HBL7DBBN	BROWN
HBL7DBY	YELLOW

LIST OF PARTS

DESCRIPTION	MATERIAL	FINISH
HOUSING	TPE	SEE TABLE
FEMALE CONTACT	BRASS	
RIVET	BRASS	
MALE CONTACT	BRASS	
BUSS BAR	BRASS	
FEMALE CAP	TPE	SEE TABLE
CABLE ASSY'S	CABLE	NATURAL CLEAR
	SLEEVE	ANODIZE

SYM	REVISIONS	APP	DATE
3	REVISED NOTE 2 FROM 600VAC/250VDC TO 600V PER DCN 23410 RGP	RGP	11/01/17
2	UPDATED ASSY. TO SHOW NEW CABLE ORIENTATION 6X FEMALE CAPS WAS 6X PROTECTIVE CAP ASSY'S LIST OF PARTS DESCRIPTION CABLE ASSY'S WAS CAP ASSY. LIST OF PARTS FINISH NATURAL COLOR WAS BLACK ADD ± .02 & ± .5 TO NOTE 1 CHANGED NOTE 3 PER DCM 11484 MJM	TWB	1/11/05
1	RELEASED PER DCN 10992 MJM	TWB	6/25/03

THE DESIGN AND DIMENSIONS OF THE PRODUCT SHOWN ON THIS DRAWING ARE SUBJECT TO CHANGE WITHOUT NOTICE

TITLE
SINGLE POLE DISTRIBUTION BLOCK

TOLERANCES UNLESS OTHERWISE SPECIFIED
FRACTIONS ± 1/64
DECIMALS ± .005
ANGLES ± 2°

WIRING DEVICE-KELLEMS
HUBBELL INCORPORATED
BRIDGEPORT, CT

DR. BY MJM | APP. BY TWB
TR. BY | SCALE 1:1
CHK'D BY TWB | DATE 6/11/03

DIMENSION SHEET FOR CAT. NO. SEE TABLE

REPAIRABLE ☐ NON-REPAIRABLE ☒

B

M-8939

3

CODE 74545