M-12094	1

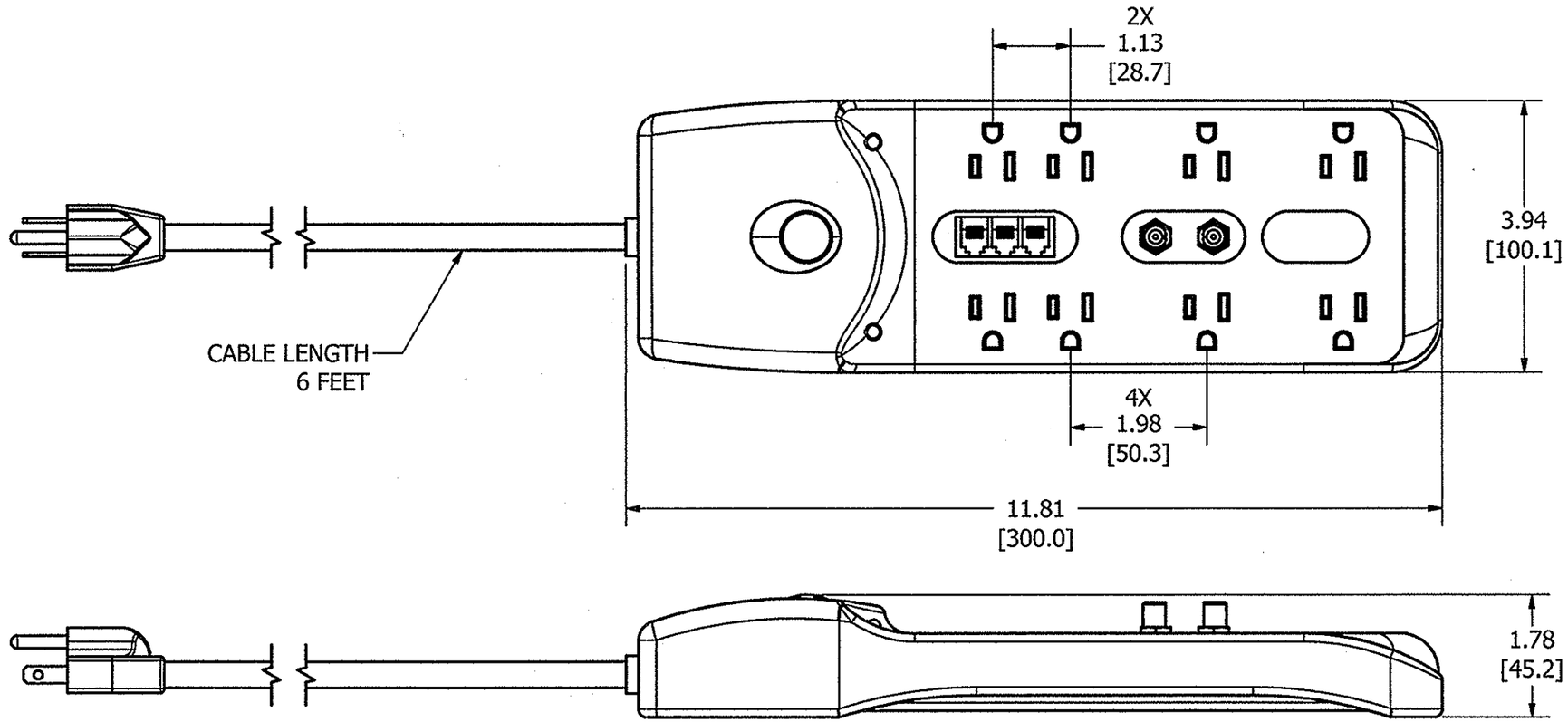

CATALOG NO. HBL8PS2100MA SHOWN

HUBBELL CAT. NO.	HBL8PS2100MA	HBL8PS2100DA
COAX PROTECTION	1	2

NOTES:
ALL DIMENSIONS ARE IN INCHES [mm]
MEETS UL STANDARD 1449 3RD EDITION
ELECTRICAL RATING: 15A, 125V, 1875W
VOLTAGE PROTECTION RATING (VPR): 400V (L-N, N-G), 500V (L-G)
MAXIMUM CONTINUIOUS OVER VOLTAGE (MCOV): 127V
NOMINAL DISCHARGE CURRENT (In): 3kA
SURGE ENERGY RATING: 2100J
MAXIMUM SURGE CURRENT RATING: 39,000A
EMI/RFI NOISE FILTER (150khz - 30 Mhz): UP TO 20dB
RJ11 PHONE/DATA PROTECTION (350V): 1 IN, 2 OUT
ALL POWER TAPS EQUIPPED AS FOLLOWS:
LIGHTED PUSHBUTTON ON/OFF MASTER SWITCH WITH BUILT-IN CIRCUIT BREAKER
TAMPER RESISTANT OUTLETS, PROTECTION LED INDICATOR

CODE 74545

LIST OF PARTS

DESCRIPTION	MATERIAL	FINISH
HOUSING	ABS	OFF WHITE

DIMENSION SHEET FOR CAT. NO. SEE TABLE

REPAIRABLE ☐ NON-REPAIRABLE ☒

SYM	DESCRIPTION	APPRO	DATE
1	RELEASED PER DCN18355	SBW	9/19/11

THE DESIGN AND DIMENSIONS OF THE PRODUCT SHOWN ON THIS DRAWING ARE SUBJECT TO CHANGE WITHOUT NOTICE

TITLE SURGE PROTECTIVE DEVICE, EIGHT OUTLET RELOCATABLE POWER TAP

TOLERANCES UNLESS OTHERWISE SPECIFIED
FRACTIONS ±1/64
DECIMALS ±.005
ANGLES ±2°

WIRING DEVICE-KELLEMS
HUBBELL INCORPORATED
SHELTON, CT

DR. BY	SBW	APP. BY	
TR. BY		SCALE	1:2
CHK'D BY		DATE	9/19/2011

B

M-12094

1