M-10430 | 1

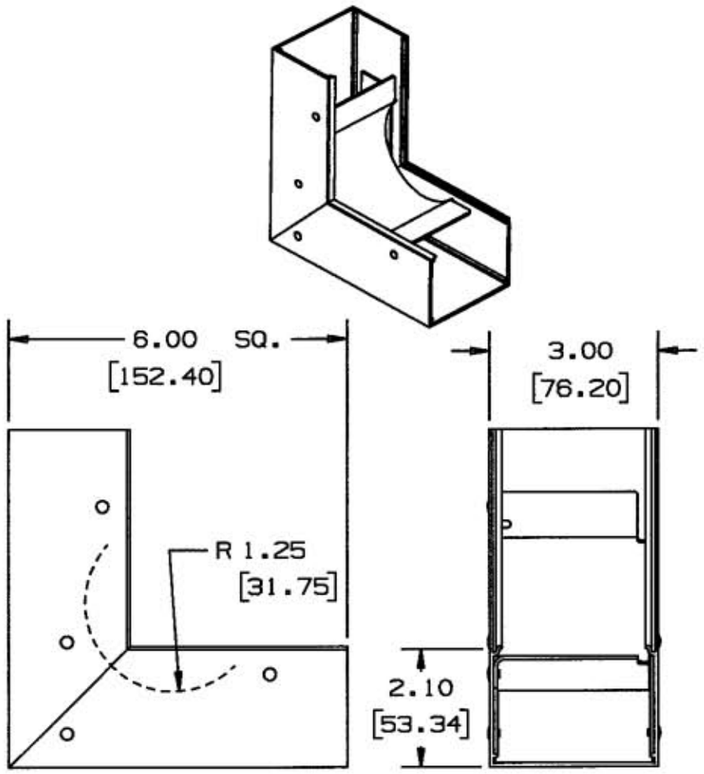

INTERNAL ELBOW-1CHANNEL
BASE ASSY
CAT. NO. HBLALU3817

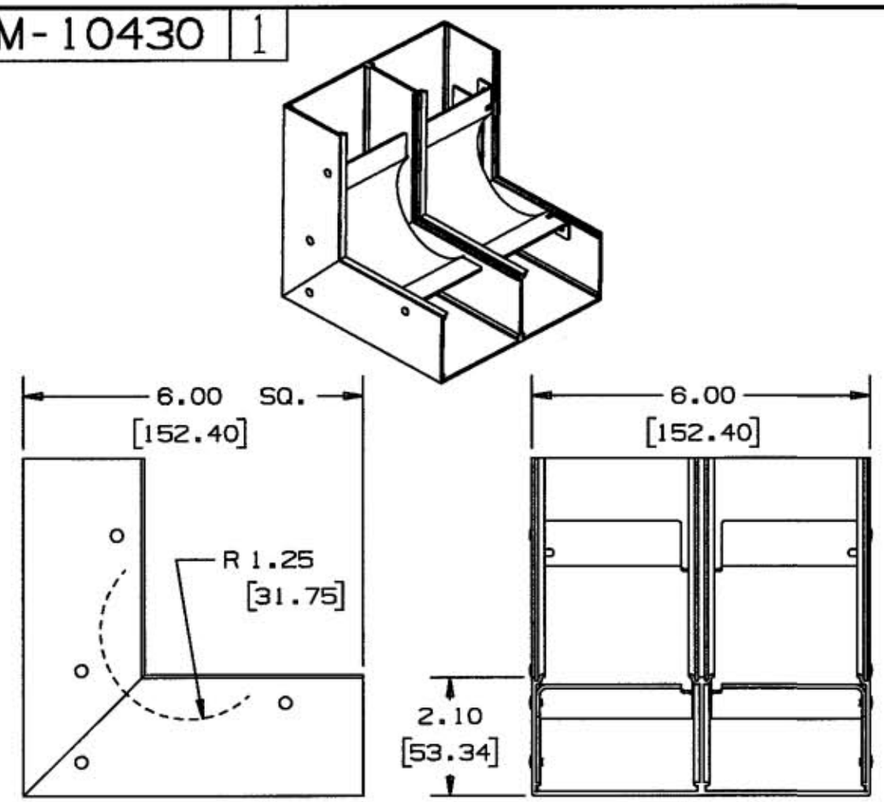

INTERNAL ELBOW-2 CHANNEL
BASE ASSY
CAT. NO. HBLALU4817

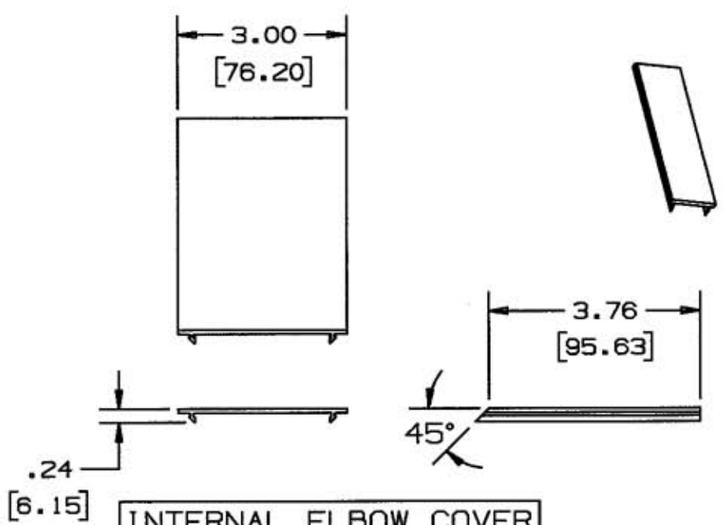

INTERNAL ELBOW COVER
SUPPLIED WITH

QTY.	CAT. NO.
2	HBLALU3817
4	HBLALU4817

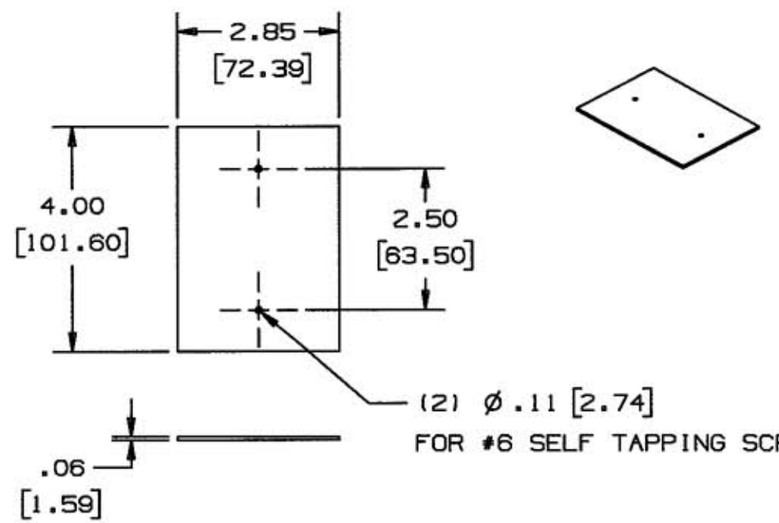

COUPLING SUPPLIED WITH

QTY.	CAT. NO.
2	HBLALU3817
4	HBLALU4817

NOTE: ALL DIMENSIONS IN INCHES AND [MM]

CODE 74545

LIST OF PARTS

DESCRIPTION	MATERIAL	FINISH
BASE ASSY	ALUMINUM	SATIN ANODIZED
COVER	ALUMINUM	SATIN ANODIZED
COUPLING	ALUMINUM	SATIN ANODIZED

DIMENSION SHEET FOR CAT. NO. SEE TABLE

REPAIRABLE ☐ NON-REPAIRABLE ☒

SYM	REVISIONS	APP	DATE
1	RELEASED PER DCN 13553		11/14/06

THE DESIGN AND DIMENSIONS OF THE PRODUCT SHOWN ON THIS DRAWING ARE SUBJECT TO CHANGE WITHOUT NOTICE

TITLE INTERNAL ELBOW ALUMINUM SERIES

TOLERANCES UNLESS OTHERWISE SPECIFIED
FRACTIONS ±1/64
DECIMALS ±.005
ANGLES ±2°

WIRING DEVICE-KELLEMS
HUBBELL INCORPORATED
BRIDGEPORT, CT

DR. BY SRE | APP. BY
TR. BY | SCALE 1:1
CHK'D BY | DATE 11/14/06

B

M-10430

1