M-10597 | 2

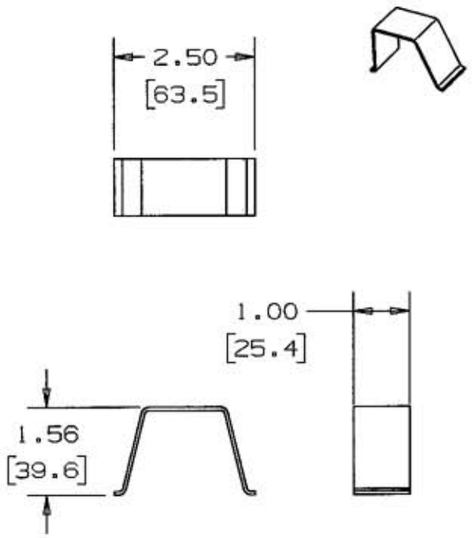

WIRE CLIP
CAT. NO. HBLALU57WC

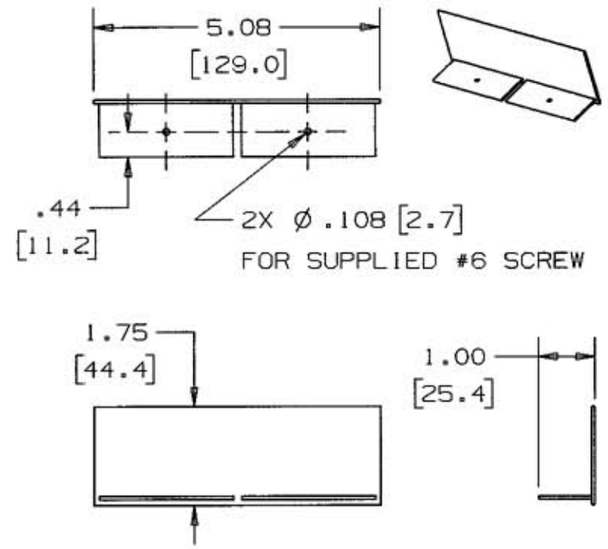

BLANK END FITTING
CAT. NO. HBLALU5010B

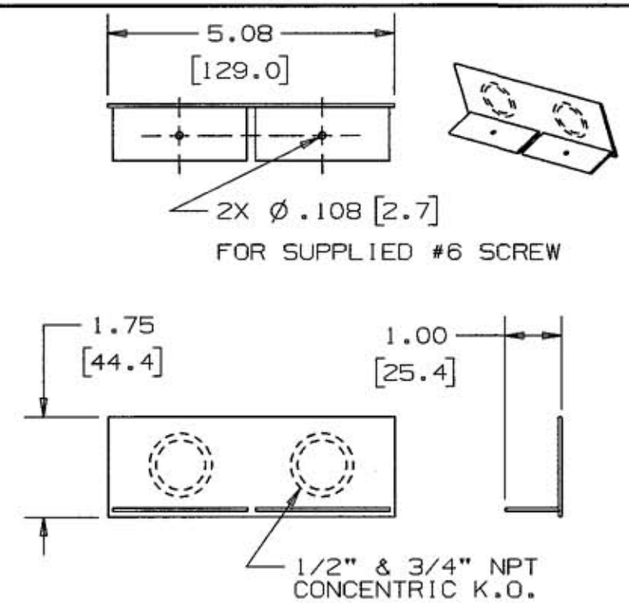

ENTRANCE END FITTING
CAT. NO. HBLALU5010B2 (SHOWN)
CAT. NO. HBLALU5010B2___
PROVIDED WITH OR WITHOUT CONCENTRIC KNOCKOUTS AS SHOWN OR HOLES FOR 1/2", 3/4" OR 1" TRADE SIZE AT SAME LOCATIONS

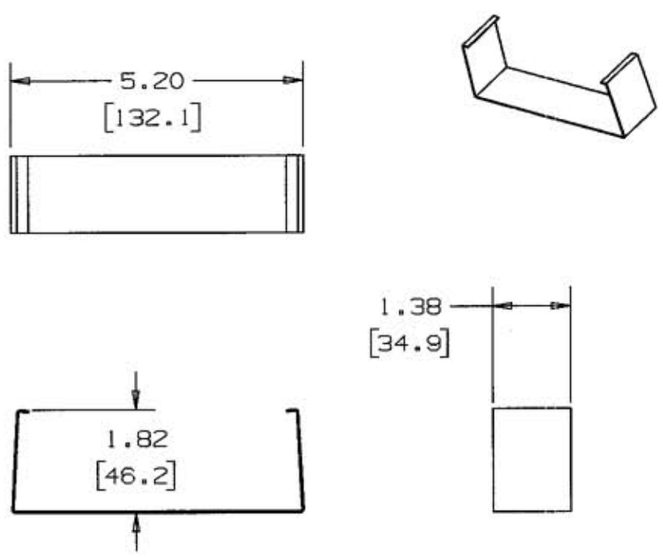

COVER CLIP
CAT. NO. HBLALU5076

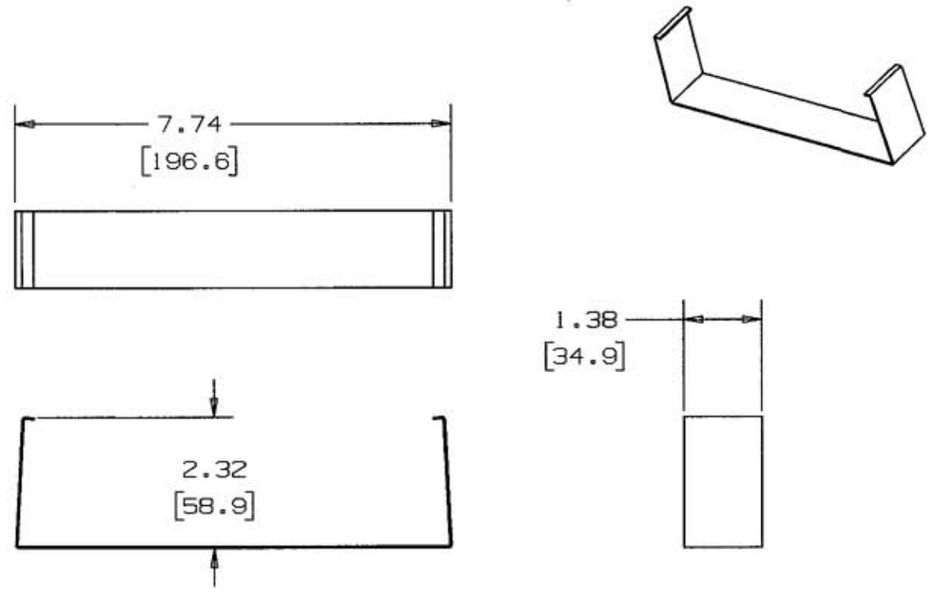

COVER CLIP
CAT. NO. HBLALU7606

NOTE: ALL DIMENSIONS IN INCHES AND [MM]

CODE 74545

LIST OF PARTS

DESCRIPTION	MATERIAL	FINISH
WIRE CLIP	ALUMINUM	SATIN ANODIZED
BLANK END FITTING	ALUMINUM	SATIN ANODIZED
ENTRANCE END FITTING	ALUMINUM	SATIN ANODIZED
COVER CLIP	STAINLESS	BRIGHT PASSIVATE

SYM	REVISIONS	APP	DATE
2	IN ENTRANCE END FITTING ADDED CAT NO HBLALU5010B2 -- & NOTE DCN14604	SRE	2/11/08
1	RELEASED PER DCN 13903	SRE	4/26/07

THE DESIGN AND DIMENSIONS OF THE PRODUCT SHOWN ON THIS DRAWING ARE SUBJECT TO CHANGE WITHOUT NOTICE

TITLE
RACEWAY MISC.
ALUMINUM SERIES

TOLERANCES UNLESS OTHERWISE SPECIFIED
FRACTIONS ± 1/64
DECIMALS ± .005
ANGLES ± 2°

WIRING DEVICE-KELLEMS
HUBBELL INCORPORATED
BRIDGEPORT, CT

DR. BY SRE | APP. BY SRE
TR. BY | SCALE 1:1
CHK'D BY SRE | DATE 4/26/07

DIMENSION SHEET FOR CAT. NO. SEE TABLE

REPAIRABLE ☐ NON-REPAIRABLE ☒

B

M-10597

2