M-10603 2

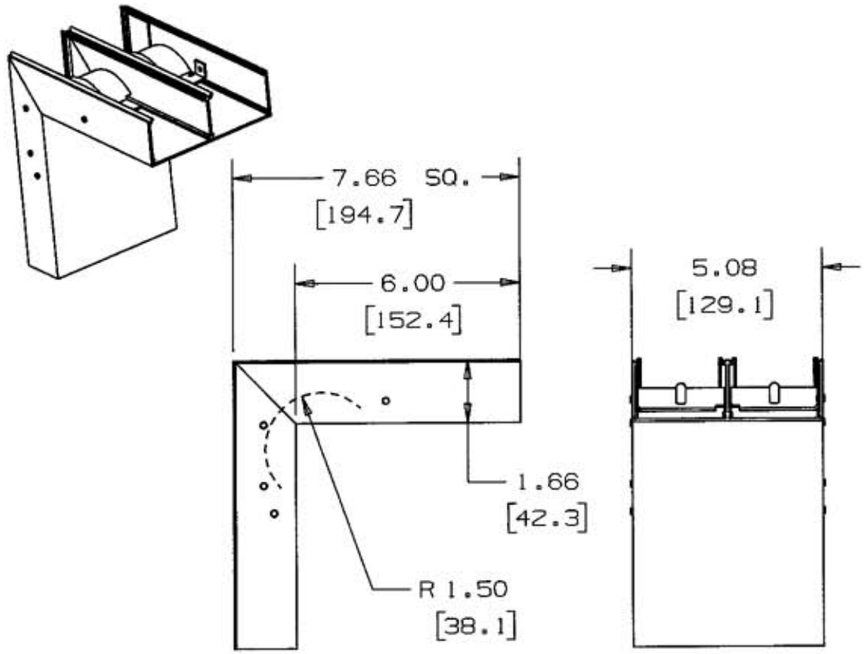

EXTERNAL ELBOW, 2-CHANNEL, BASE ASSY
CAT. NO. HBLALU5018 (FULL COVER)
CAT. NO. HBLALU5018___ (SHORT COVER LENGTH)

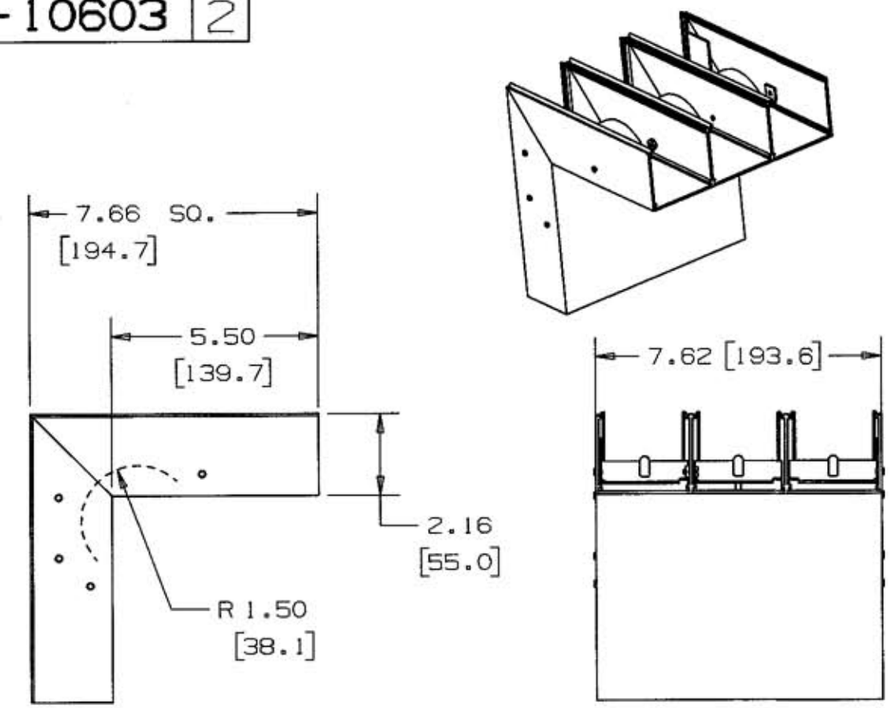

EXTERNAL ELBOW, 3-CHANNEL, BASE ASSY
CAT. NO. HBLALU7618 (FULL COVER)
CAT. NO. HBLALU7618___ (SHORT COVER LENGTH)

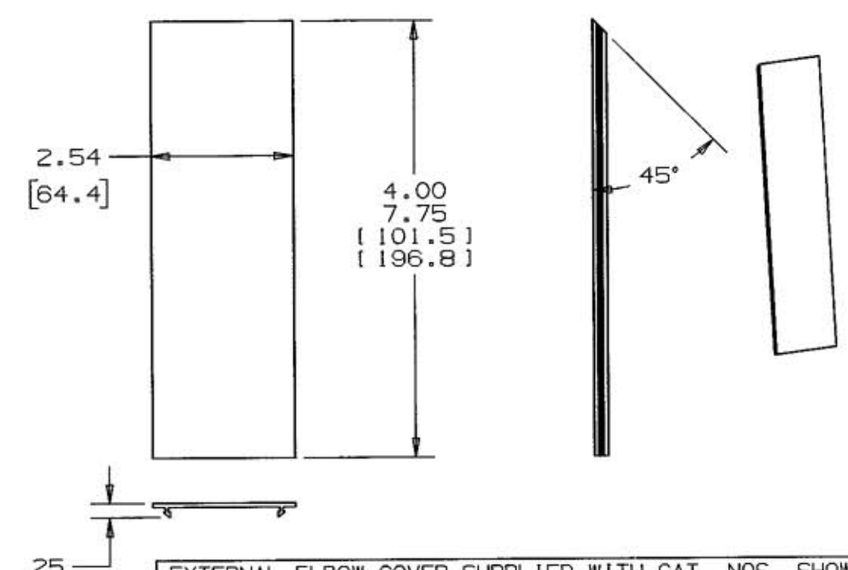

EXTERNAL ELBOW COVER SUPPLIED WITH CAT. NOS. SHOWN:

QUANTITY	CAT. NO.	LENGTH
4	HBLALU5018	7.75
6	HBLALU7618	7.75
4	HBLALU5018___	4.00 THRU 7.74
6	HBLALU7618___	4.00 THRU 7.74

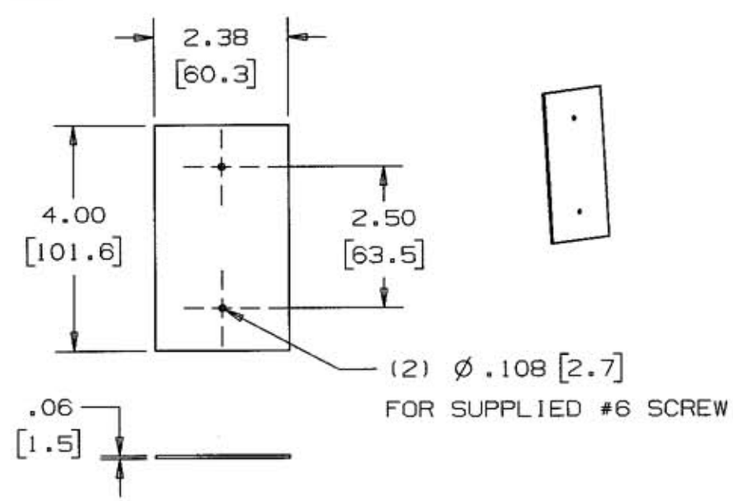

COUPLING SUPPLIED WITH CAT. NOS. SHOWN:

QUANTITY	CAT. NO.
4	HBLALU5018
6	HBLALU7618
4	HBLALU5018___
6	HBLALU7618___

NOTE: ALL DIMENSIONS IN INCHES AND [MM]

LIST OF PARTS

DESCRIPTION	MATERIAL	FINISH
BASE ASSY.	ALUMINUM	SATIN ANODIZED
EXTERNAL ELBOW COVER	ALUMINUM	SATIN ANODIZED
COUPLING	ALUMINUM	SATIN ANODIZED

SYM	REVISIONS	APP	DATE
2	ADDED CAT. NOS. HBLALU5018__ & HBLALU7618__ DCN14604	SRE	2/12/08
1	RELEASED PER DCN13903	SRE	4/30/07

THE DESIGN AND DIMENSIONS OF THE PRODUCT SHOWN ON THIS DRAWING ARE SUBJECT TO CHANGE WITHOUT NOTICE

TITLE
EXTERNAL ELBOW
ALUMINUM SERIES

TOLERANCES UNLESS OTHERWISE SPECIFIED
FRACTIONS ± 1/64
DECIMALS ± .005
ANGLES ± 2°

WIRING DEVICE-KELLEMS
HUBBELL INCORPORATED
BRIDGEPORT, CT

DR. BY SRE | APP. BY SRE
TR. BY | SCALE NONE
CHK'D BY SRE | DATE 4/30/07

DIMENSION SHEET FOR CAT. NO. SEE TABLE

REPAIRABLE ☐ NON-REPAIRABLE ☒

B

M-10603

2

CODE 74545