M-10596 | 1

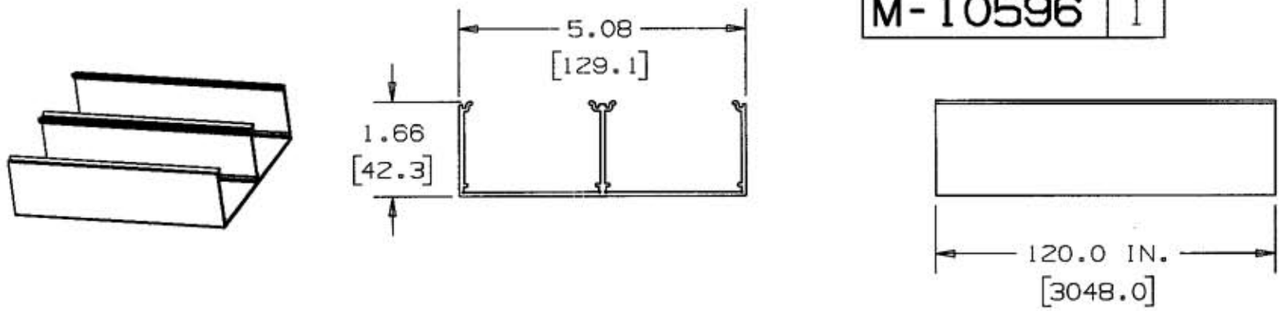

RACEWAY BASE-2 CHANNEL
CAT. NO. HBLALU5000B10

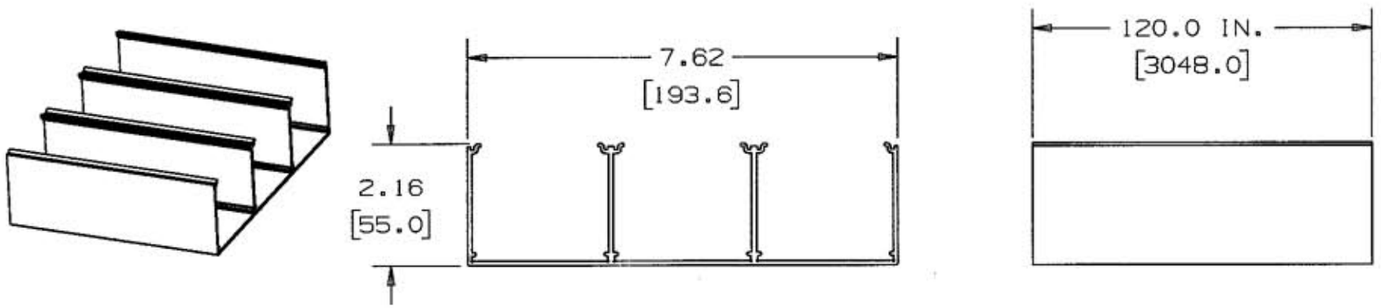

RACEWAY BASE-3 CHANNEL
CAT. NO. HBLALU7620B10

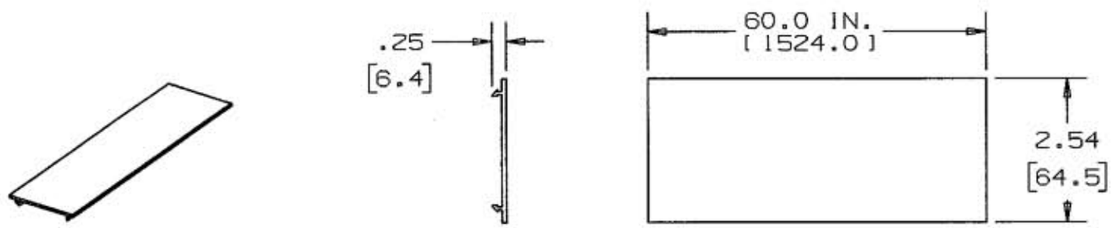

RACEWAY COVER - 1 CHANNEL
CAT. NO. HBLALUC57

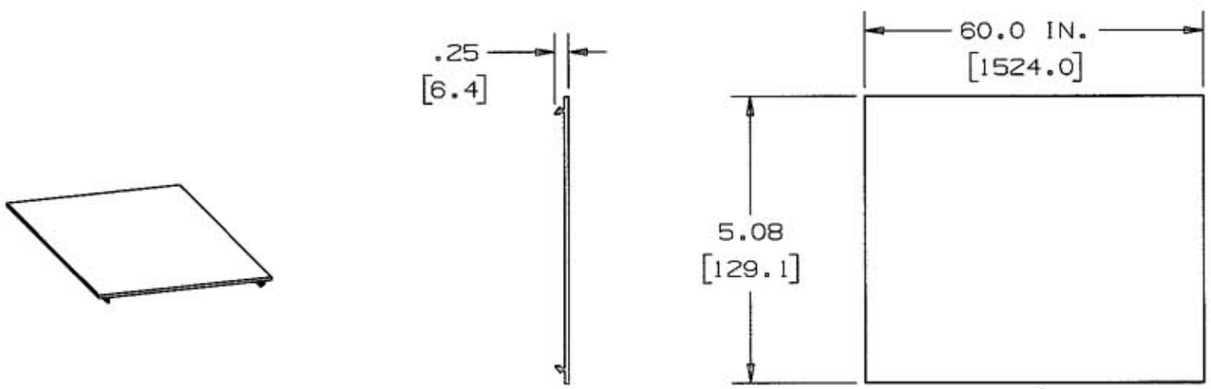

RACEWAY COVER - 2 CHANNEL
CAT. NO. HBLALU2C57

NOTE: ALL DIMENSIONS IN INCHES AND [MM]

CODE 74545

LIST OF PARTS

DESCRIPTION	MATERIAL	FINISH
RACEWAY BASE	ALUMINUM	SATIN ANODIZED
RACEWAY COVER	ALUMINUM	SATIN ANODIZED

SYM	REVISIONS	APP	DATE
1	RELEASED PER DCN 13903	SRE	4/24/07

THE DESIGN AND DIMENSIONS OF THE PRODUCT SHOWN ON THIS DRAWING ARE SUBJECT TO CHANGE WITHOUT NOTICE

TITLE
RACEWAY BASE & COVER
ALUMINUM SERIES

TOLERANCES UNLESS OTHERWISE SPECIFIED
FRACTIONS ± 1/64
DECIMALS ± .005
ANGLES ± 2°

WIRING DEVICE-KELLEMS
HUBBELL INCORPORATED
BRIDGEPORT, CT

DR. BY SRE	APP. BY SRE
TR. BY	SCALE 1 : 1
CHK'D BY SRE	DATE 4/24/07

DIMENSION SHEET FOR CAT. NO. SEE TABLE

REPAIRABLE ☐ NON-REPAIRABLE ☒

B

M-10596

1