M-10037 | 3

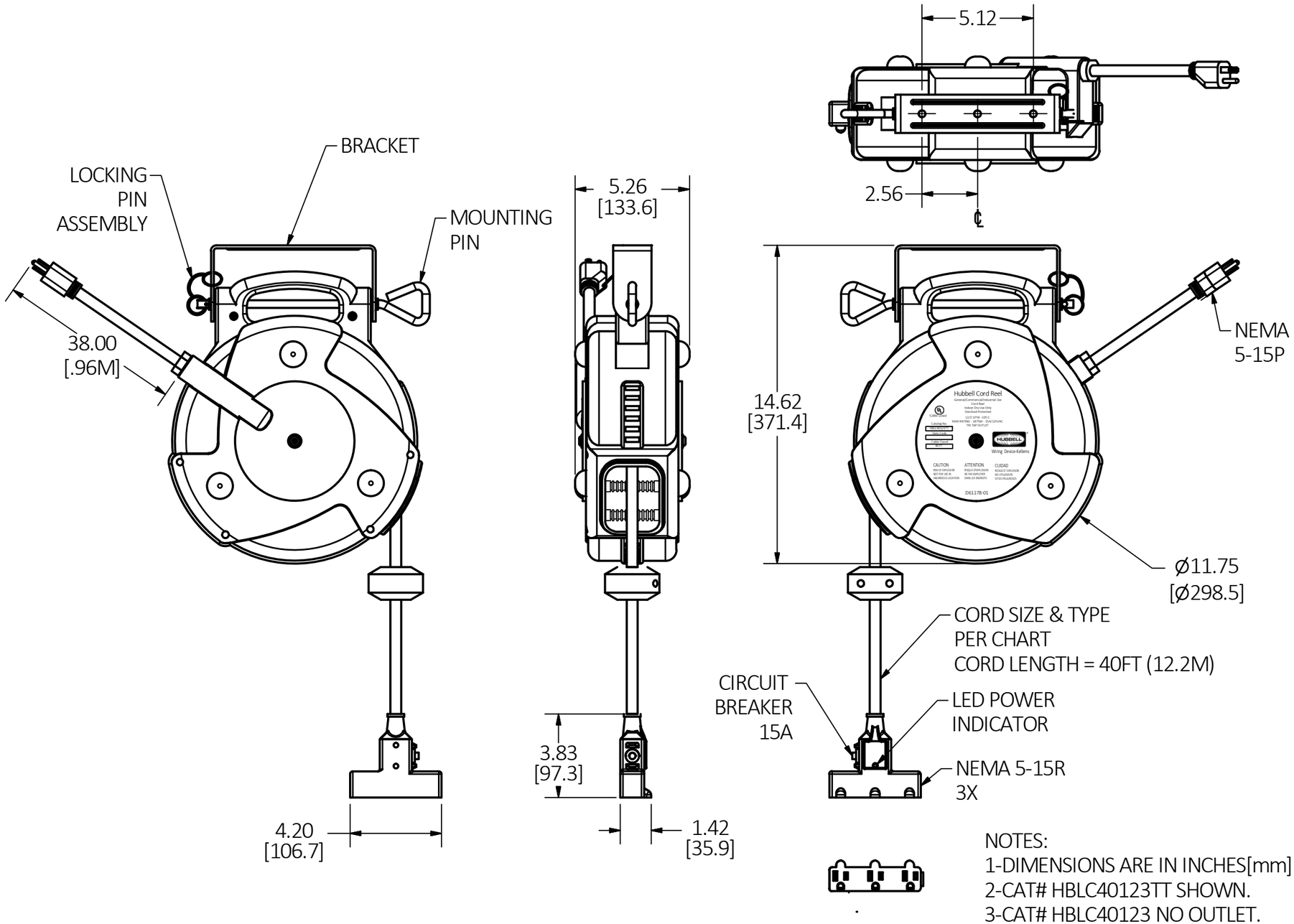

NOTES:
1-DIMENSIONS ARE IN INCHES[mm]
2-CAT# HBLC40123TT SHOWN.
3-CAT# HBLC40123 NO OUTLET.

CATALOG NUMBER	CASE COLOR	APPROX. WEIGHT	DESCRIPTION	CORD LENGTH	RATING	CORD TYPE
HBLC40123	BLACK	13.75LB/6.24KG	SINGLE OUTLET	40FT/12.2M	15A 1875W 125 V	12/3 SJTW
HBLC40123TT	BLACK	13.75LB/6.24KG	TRI TAP OUTLET	40FT/12.2M	15A 1875W 125 V	12/3 SJTW

CAGE CODE 74545

LIST OF PARTS

DESCRIPTION	MATERIAL	FINISH
INTERNAL CIRCUITRY PARTS	COPPER ALLOY	SEE TABLE
CASE	THERMOPLASTIC	BLACK
MOUNTING BRACKET	PAINTED STEEL	BLACK
CORD STOP	THERMOPLASTIC	BLACK
CONNECTING BODY	MOLDED PVC	YELLOW
INSERT PLUG	MOLDED PVC	YELLOW
MOUNTING PIN	STEEL	PLATED
LOCKING PIN	STEEL	PLATED

REV	DESCRIPTION	APP	DATE
3	REDRAWN. METAL BRACKET WAS PLASTIC. ADDED HBLC40123 TO CHART. REVISED DIMENSIONS TO UPDATED DESIGN PER DCN 23383.	MJZ	10/25/17
2	ADDED LED POWER INDICATOR AND CALLOUT TO FRONT VIEW PER DCN 21251. MYA	DJP	6/17/17
1	RELEASED PER DCN 13018. ABS		4/17/06

THE DESIGN AND DIMENSIONS OF THE PRODUCT SHOWN ON THIS DRAWING ARE SUBJECT TO CHANGE WITHOUT NOTICE. DIMENSIONS ARE IN INCHES [mm].

TITLE

COMMERCIAL CORD REEL

WIRING DEVICE-KELLEMS
HUBBELL INCORPORATED
SHELTON, CT

TOLERANCES UNLESS OTHERWISE SPECIFIED
.XX = ± .01
.XXX= ± .005
ANGLE TOL. ±2°

DR. BY	MJZ	SCALE	0.2: 1
CHK. BY	EM	DATE	10/10/17

DIMENSION SHEET FOR CAT. NO. HBLC40123 AND HBLC40123TT

B

M-10037

3